Push-On SMP Female Right Angle to N Female Bulkhead Cable 48 Inch Length Using ET-LMR-100 Coax

RF Cable Assemblies Technical Data Sheet ET32387

Configuration

- Connector 1: Push-OnSMP Female Right Angle
- Connector 2: N Female Bulkhead
- Cable Type: ET-LMR-100A

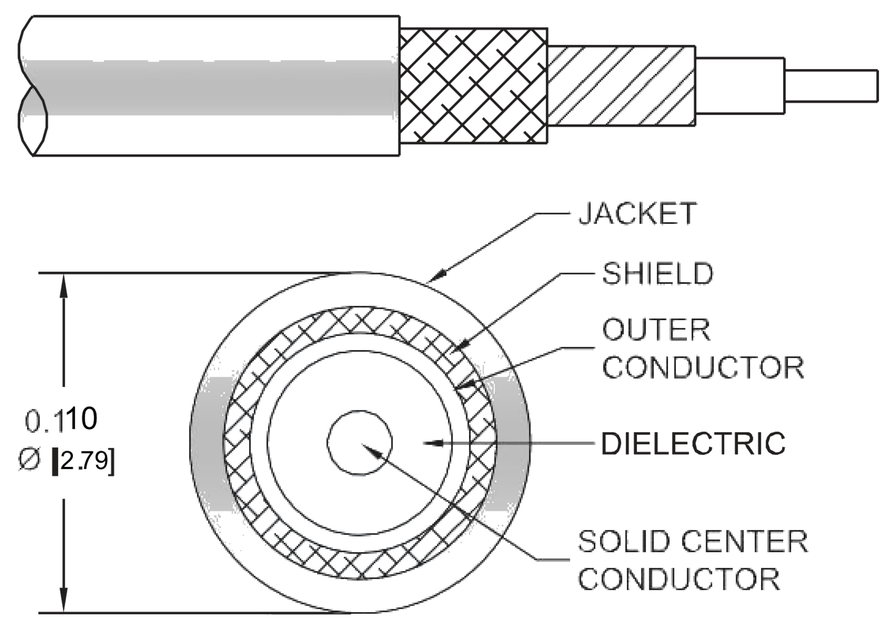

Features

- Max Frequency 3 GHz
- Shielding Effectivity > 90 dB
- 66% Phase Velocity
- Double Shielded
- PVC Jacket

Applications

- General Purpose
- Laboratory Use

Description

Ebeestock's ET32387 SMP female push-on right angle to type N female bulkhead 48 inch cable using ET-LMR-100 coax is part of our full line of RF components available for same-day shipping. Ebeestock's flexible RF cable assemblies are ideal for applications where tight bends and flexure are required. This Ebeestock SMP to type N cable assembly has a female to female gender configuration with 50 ohm flexible ET-LMR-100A coax. The ET32387 SMP female to type N female cable assembly operates to 3 GHz. The right angle SMP interface on the ET-LMR-100A cable allows for easier connections in tight spaces. Our RF cable assembly with type N bulkhead interface allows designers to create external connections on their prod- uct enclosures, and can be used in a variety of other rack mount and panel mount applications. The double shielding of this Ebeestock cable assembly provides excellent shielding effectiveness of better than 90 dB.

Custom versions of most RF cable assemblies can be built and shipped same day. Custom cable assembly lengths can be obtained by specifying the desired length on the web site at time of order or by contacting a sales representative. Other avail- able RF cable assembly value added services include connector orientation or clocking, heat shrink booting and custom label- ing. RF testing can also be performed to document the electrical performance of your cable assembly.

Click the following link (or enter part number in "SEARCH" on website) to obtain additional part information including price, inventory and certifications: Push-On SMP Female Right Angle to N Female Bulkhead Cable 48 Inch Length Using ET-LMR-100 Coax ET32387

8th Floor, Building 1, Yongfu Science and Technology Center Industrial Park,
Nanzha District 5, Humen,523900, Dongguan, Guangdong, China.

Webstie:www.ebeestock.com Email:sales@ebeestock.com

© 2022 Ebeestock Enterprises All Rights Reserved

Push-On SMP Female Right Angle to N Female Bulkhead Cable 48 Inch Length Using ET-LMR-100 Coax

RF Cable Assemblies Technical Data Sheet ET32387

Electrical Specifications

Description	Minimum	Typical	Maximum	Units
Frequency Range	DC		3	GHz
VSWR			1.4:1	
Velocity of Propagation		66		%
RF Shielding	90			dB
Group Delay		1.54 [5.05]		ns/ft [ns/m]
Capacitance		30.8 [101.05]		pF/ft [pF/m]
Inductance		0.077 [0.25]		uH/ft [uH/m]
DC Resistance Inner Conductor		81 [265.75]		Ohms/1000ft [Ohms/
Km]				
DC Resistance Outer Conductor		9.5 [31.17]		Ohms/1000ft [Ohms/
Km]				
Jacket Spark			2,000	Vrms

Specifications by Frequency

Description	F1	F2	F3	F4	F5	Units
Insertion Loss (Max.)	0.76	0.96	1.26	1.9	2.04	dB

Electrical Specification Notes:
The Insertion Loss data above is based on the performace specifications of the coax use in this assembly. The Insertion Loss includes an estimated insertion loss of 0.3dB of connector loss.

Mechanical Specifications

Cable Assembly

Length*	48 in [121.92 cm]
Diameter	0.807 in [20.5 mm]

Cable

Cable Type	ET-LMR-100A
Impedance	50 Ohms
Inner Conductor Type	Solid
Inner Conductor Material and Plating	Copper Clad Steel
Dielectric Type	PE
Number of Shields	2
Shield Layer 1	Aluminum Tape
Shield Layer 2	Tinned Copper Braid

Click the following link (or enter part number in “SEARCH” on website) to obtain additional part information including price, inventory and certifications: Push-On SMP Female Right Angle to N Female Bulkhead Cable 48 Inch Length Using ET-LMR-100 Coax ET32387

8th Floor, Building 1, Yongfu Science and Technology Center Industrial Park,
Nanzha District 5, Humen,523900, Dongguan, Guangdong, China.

Webstie:www.ebeestock.com Email:sales@ebeestock.com

© 2022 Ebeestock Enterprises All Rights Reserved

Push-On SMP Female Right Angle to N Female Bulkhead Cable 48 Inch Length Using ET-LMR-100 Coax

RF Cable Assemblies Technical Data Sheet ET32387

Jacket Material	PVC, Black
Jacket Diameter	0.11 in [2.79 mm]
One Time Minimum Bend Radius	0.25 in [6.35 mm]
Repeated Minimum Bend Radius	1 in [25.4 mm]
Bending Moment	0.1 lbs-ft [0.14 N-m]
Flat Plate Crush	10 lbs/in [0.18 Kg/mm]
Tensile Strength	15 lbs [6.8 Kg]

Connectors

Description	Connector 1	Connector 2
Type	SMP Female Right Angle	N Female Bulkhead
Specification	MIL-STD-348A	MIL-STD-348A
Impedance	50 Ohms	50 Ohms
Connection Method	Push-On	
Mating Cycles		100
Contact Material and Plating	Beryllium Copper, Gold	Brass, Gold
Contact Plating Specification	30µ in. minimum	30 µin minimum
Dielectric Type	Teflon	PTFE
Outer Conductor Material and Plating	Beryllium Copper, Gold	
Outer Conductor Plating Specification	3µ in. minimum	
Body Material and Plating	Brass, Gold	Brass, Nickel
Body Plating Specification	3µ in. minimum	100 µin minimum

Mechanical Specification Notes:
*All cable assemblies have a length tolerance of 1.5% or ± 3/8”, whichever is greater.

Environmental Specifications

Temperature

Operating Range	-40 to +85 deg C

Compliance Certifications (see product page for current document)

Plotted and Other Data

Notes:

Click the following link (or enter part number in “SEARCH” on website) to obtain additional part information including price, inventory and certifications: Push-On SMP Female Right Angle to N Female Bulkhead Cable 48 Inch Length Using ET-LMR-100 Coax ET32387

8th Floor, Building 1, Yongfu Science and Technology Center Industrial Park,
Nanzha District 5, Humen,523900, Dongguan, Guangdong, China.

Webstie:www.ebeestock.com Email:sales@ebeestock.com

© 2022 Ebeestock Enterprises All Rights Reserved

Push-On SMP Female Right Angle to N Female Bulkhead Cable 48 Inch Length Using ET-LMR-100 Coax

RF Cable Assemblies Technical Data Sheet ET32387

How to Order

Part Number Configuration: **ET3W05673 - xx uu**

- **uu** — Unit of Measure:
  - cm = Centimeters
  - <blank> = Inches
- **xx** — Length
- **ET3W05673** — Base Number

Example: ET3W05673-12 = 12 inches long cable
ET3W05673-100cm = 100 cm long cable

Push-On SMP Female Right Angle to N Female Bulkhead Cable 48 Inch Length Using ET-LMR-100 Coax from Ebeestock Enterprises has same day shipment for domestic and International orders. Our RF, microwave and millimeter wave products maintain a 99.4% availability and are part of the broadest selection in the industry.

Click the following link (or enter part number in “SEARCH” on website) to obtain additional part information including price, inventory and certifications: Push-On SMP Female Right Angle to N Female Bulkhead Cable 48 Inch Length Using ET-LMR-100 Coax ET32387

URL: https://www.ebeestock.com/push-on-smp-female-right-angle-to-n-female-bulkhead-cable-12-inch-length-using-lmr-100-coax-0032384

The information contained in this document is accurate to the best of our knowledge and representative of the part described herein. It may be necessary to make modifications to the part and/or the documentation of the part, in order to implement improvements. Ebeestock reserves the right to make such changes as required. Unless otherwise stated, all specifications are nominal. Ebeestock does not make any representation or warranty regarding the suitability of the part described herein for any particular purpose, and Ebeestock does not assume any liability arising out of the use of any part or documentation.

8th Floor, Building 1, Yongfu Science and Technology Center Industrial Park,
Nanzha District 5, Humen,523900, Dongguan, Guangdong, China.

Webstie:www.ebeestock.com Email:sales@ebeestock.com

© 2022 Ebeestock Enterprises All Rights Reserved

© 2022 Ebeestock Enterprises All Rights Reserved

www.ebeestock.com

REVISIONS			
REV.	DESCRIPTION	DATE	APPROVED
A	INITIAL RELEASE	04/30/19	S.ELLIS

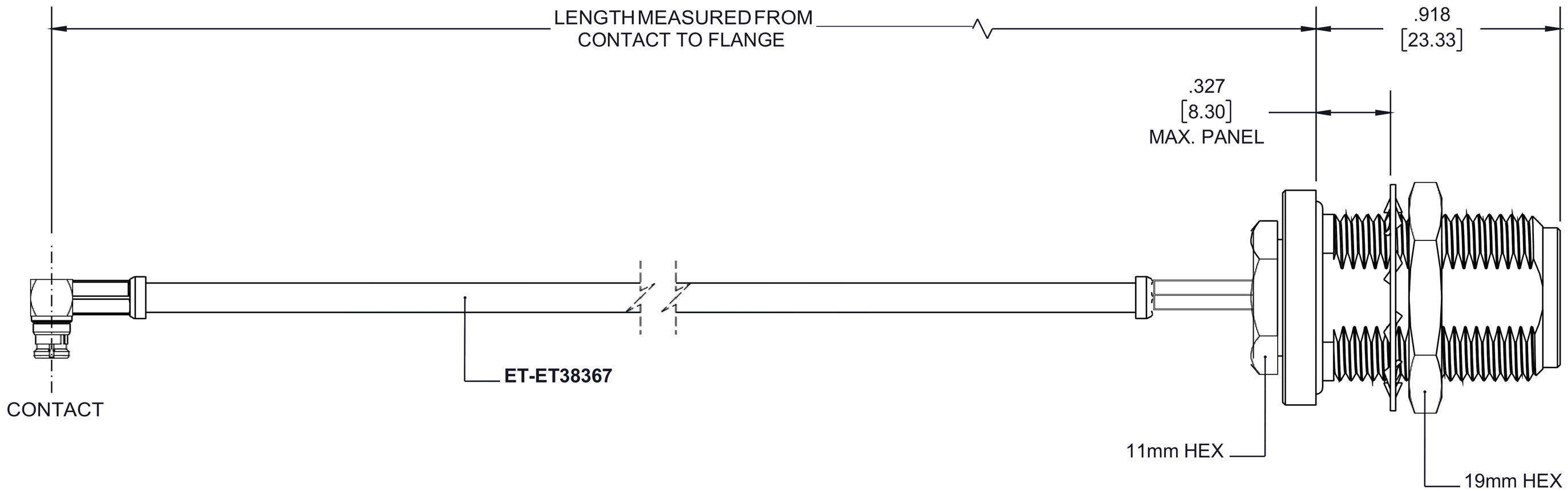

SMP FEMALE
RA

N FEMALE
BULKHEAD

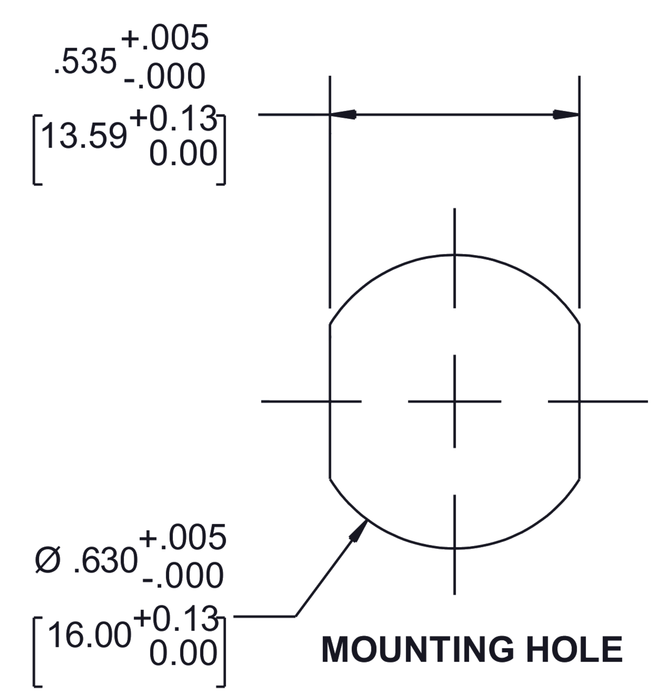

MOUNTING HOLE

UNLESS OTHERWISE SPECIFIED
LEADING DIMENSIONS ARE INCHES
DIMENSIONS IN [ ] ARE MILLIMETERS

TOLERANCES:

.X=± .2	[5.08]	FRACTIONS
.XX=± .01	[.25]	± 1/32
.XXX=± .005	[.13]	ANGLES ± 1°

ALL DIMENSIONS SHOWN ARE FOR REFERENCE ONLY.

THIRD ANGLE PROJECTION

PASTERNACK
an INFINITE brand
8th Floor, Building 1, Yongfu Science and Technology Center Industrial Park
P.O.Box 16759, Irvine, CA 92623.
Phone: 1.949.261.1920 | 1.866.727.8376
Fax: 1.949.261.7451
e-mail: sales@Ebeestock.com

THE INFORMATION AND DESIGN IN THIS DOCUMENT IS THE PROPERTY OF Ebeestock CORPORATION. ALL RIGHTS RESERVED.

SHEET 1 OF 1

SCALE N/A

SIZE	CAGE	DRAWN BY	PART NUMBER	REV
A	53919	K.DANG	ET3W05673	A

THESE COMMODITIES, TECHNOLOGY OR SOFTWARE WERE EXPORTED FROM THE UNITED STATES IN ACCORDANCE WITH THE EXPORT ADMINISTRATION REGULATIONS. DIVERSION CONTRARY TO U.S. LAW PROHIBITED.

T-Rev.B