Push-On SMP Female to SMA Male Cable 60 Inch Length Using ET 38322 Coax

RF Cable Assemblies Technical Data Sheet ET32424

Configuration

- Connector 1: Push-OnSMP Female
- Connector 2: SMA Male
- Cable Type: ET38322

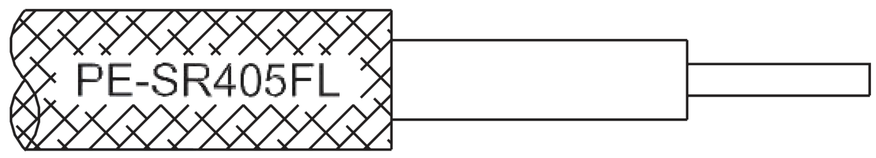

Features

- Max Frequency 18 GHz
- 69.5% Phase Velocity

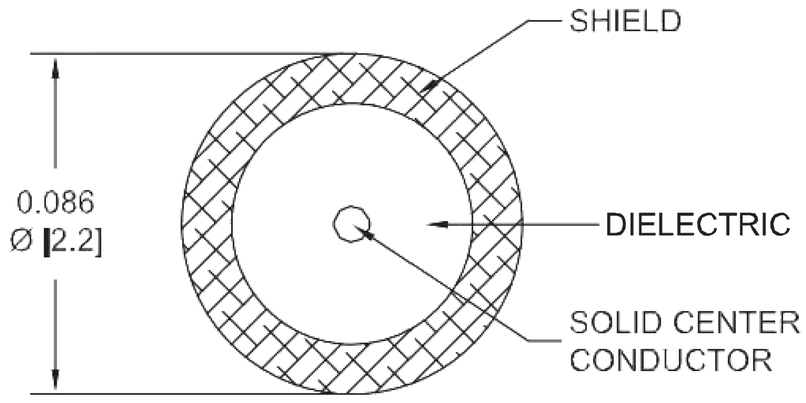

Applications

- General Purpose
- Laboratory Use

Description

Ebeestock's ET32424 SMP female push-on to SMA male 60 inch cable using ET38322 coax is part of our full line of RF components available for same-day shipping. Ebeestock's formable RF cable assemblies provide an alternative to costly pre-formed semi-rigid assemblies since they are hand formable. This Ebeestock SMP to SMA cable assembly has a female to male gender configuration with 50 ohm formable ET38322 coax. The ET32424 SMP female to SMA male cable assembly operates to 18 GHz.

Custom versions of most RF cable assemblies can be built and shipped same day. Custom cable assembly lengths can be obtained by specifying the desired length on the web site at time of order or by contacting a sales representative. Other available RF cable assembly value added services include connector orientation or clocking, heat shrink booting and custom labeling. RF testing can also be performed to document the electrical performance of your cable assembly.

Electrical Specifications

Description	Minimum	Typical	Maximum	Units
Frequency Range	DC		18	GHz
VSWR			1.5:1	
Velocity of Propagation		69.5		%
Capacitance		29 [95.14]		pF/ft [pF/m]
DC Resistance Inner Conductor		65.7 [215.55]		Ω/1000ft [Ω/Km]
DC Resistance Outer Conductor		10.2 [33.46]		Ω/1000ft [Ω/Km]

Click the following link (or enter part number in "SEARCH" on website) to obtain additional part information including price, inventory and certifications: Push-On SMP Female to SMA Male Cable 60 Inch Length Using ET38322 Coax ET32424

8th Floor, Building 1, Yongfu Science and Technology Center Industrial Park,
Nanzha District 5, Humen,523900, Dongguan, Guangdong, China.

Webstie:www.ebeestock.com Email:sales@ebeestock.com

© 2022 Ebeestock Enterprises All Rights Reserved

Push-On SMP Female to SMA Male Cable 60 Inch Length Using ET 38322 Coax

RF Cable Assemblies Technical Data Sheet ET32424

Specifications by Frequency

Description	F1	F2	F3	F4	F5	Units
Frequency	1	2	4.5	9	18	GHz
Insertion Loss (Max.)	1.33	1.58	2.22	3.38	5.69	dB

Electrical Specification Notes:
The Insertion Loss data above is based on the performance specifications of the coax use in this assembly. The Insertion Loss includes an estimated insertion loss of 0.2dB of connector Loss

Mechanical Specifications

Cable Assembly

Length*	60 in [152.4 cm]
Diameter	0.315 in [8 mm]

Cable

Cable Type	ET38322
Impedance	50 Ohms
Inner Conductor Type	Solid
Inner Conductor Material and Plating	Copper Clad Steel, Silver
Dielectric Type	PTFE
Number of Shields	1
Outer Conductor Material and Plating	Copper, Tin
Repeated Minimum Bend Radius	0.78 in [19.81 mm]

Click the following link (or enter part number in “SEARCH” on website) to obtain additional part information including price, inventory and certifications: Push-On SMP Female to SMA Male Cable 60 Inch Length Using ET38322 Coax ET32424

8th Floor, Building 1, Yongfu Science and Technology Center Industrial Park,
Nanzha District 5, Humen,523900, Dongguan, Guangdong, China.

Webstie:www.ebeestock.com Email:sales@ebeestock.com

© 2022 Ebeestock Enterprises All Rights Reserved

Push-On SMP Female to SMA Male Cable 60 Inch Length Using ET 38322 Coax

RF Cable Assemblies Technical Data Sheet ET32424

Connectors

Description	Connector 1	Connector 2
Type	SMP Female	SMA Male
Specification	MIL-STD-348A	MIL-STD-348A
Impedance	50 Ohms	50 Ohms
Connection Method	Push-On	
Mating Cycles		500
Contact Material and Plating	Beryllium Copper, Gold	Brass, Gold
Contact Plating Specification	MIL-DTL-45204	50 µin minimum
Dielectric Type	PTFE	PTFE
Outer Conductor Material and Plating	Beryllium Copper, Gold	
Outer Conductor Plating Specification	MIL-DTL-45204	
Body Material and Plating	Beryllium Copper, Gold	Stainless Steel, Gold
Body Plating Specification	MIL-DTL-45204	10 µin minimum
Coupling Nut Material and Plating		Brass, Nickel
Coupling Nut Plating Specification		100 µin minimum
Hex Size		5/16 inch
Torque		3 in-lbs [0.34 Nm]

Mechanical Specification Notes:
*All cable assemblies have a length tolerance of 1.5% or ± 3/8”, whichever is greater.

Compliance Certifications (see product page for current document)

Plotted and Other Data

Notes:

Click the following link (or enter part number in “SEARCH” on website) to obtain additional part information including price, inventory and certifications: Push-On SMP Female to SMA Male Cable 60 Inch Length Using ET38322 Coax ET32424

8th Floor, Building 1, Yongfu Science and Technology Center Industrial Park,
Nanzha District 5, Humen,523900, Dongguan, Guangdong, China.

Webstie:www.ebeestock.com Email:sales@ebeestock.com

© 2022 Ebeestock Enterprises All Rights Reserved

Push-On SMP Female to SMA Male Cable 60 Inch Length Using ET 38322 Coax

RF Cable Assemblies Technical Data Sheet ET32424

How to Order

Part Number Configuration: **ET3W07044 - xx uu**

- **uu** — Unit of Measure:
  - cm = Centimeters
  - <blank> = Inches
- **xx** — Length
- **ET3W07044** — Base Number

Example: ET3W07044-12 = 12 inches long cable
ET3W07044-100cm = 100 cm long cable

Push-On SMP Female to SMA Male Cable 60 Inch Length Using ET38322 Coax from Ebeestock Enterprises has same day shipment for domestic and International orders. Our RF, microwave and millimeter wave products maintain a 99.4% availability and are part of the broadest selection in the industry.

Click the following link (or enter part number in “SEARCH” on website) to obtain additional part information including price, inventory and certifications: Push-On SMP Female to SMA Male Cable 60 Inch Length Using ET38322 Coax ET32424

URL: https://www.ebeestock.com/push-on-smp-female-to-sma-male-cable-12-inch-length-using-pe-sr405fl-coax-0032420

The information contained in this document is accurate to the best of our knowledge and representative of the part described herein. It may be necessary to make modifications to the part and/or the documentation of the part, in order to implement improvements. Ebeestock reserves the right to make such changes as required. Unless otherwise stated, all specifications are nominal. Ebeestock does not make any representation or warranty regarding the suitability of the part described herein for any particular purpose, and Ebeestock does not assume any liability arising out of the use of any part or documentation.

8th Floor, Building 1, Yongfu Science and Technology Center Industrial Park,
Nanzha District 5, Humen,523900, Dongguan, Guangdong, China.

Webstie:www.ebeestock.com Email:sales@ebeestock.com

© 2022 Ebeestock Enterprises All Rights Reserved

© 2022 Ebeestock Enterprises All Rights Reserved

www.ebeestock.com

REVISIONS			
REV.	DESCRIPTION	DATE	APPROVED
A	INITIAL RELEASE	04/30/19	S.ELLIS

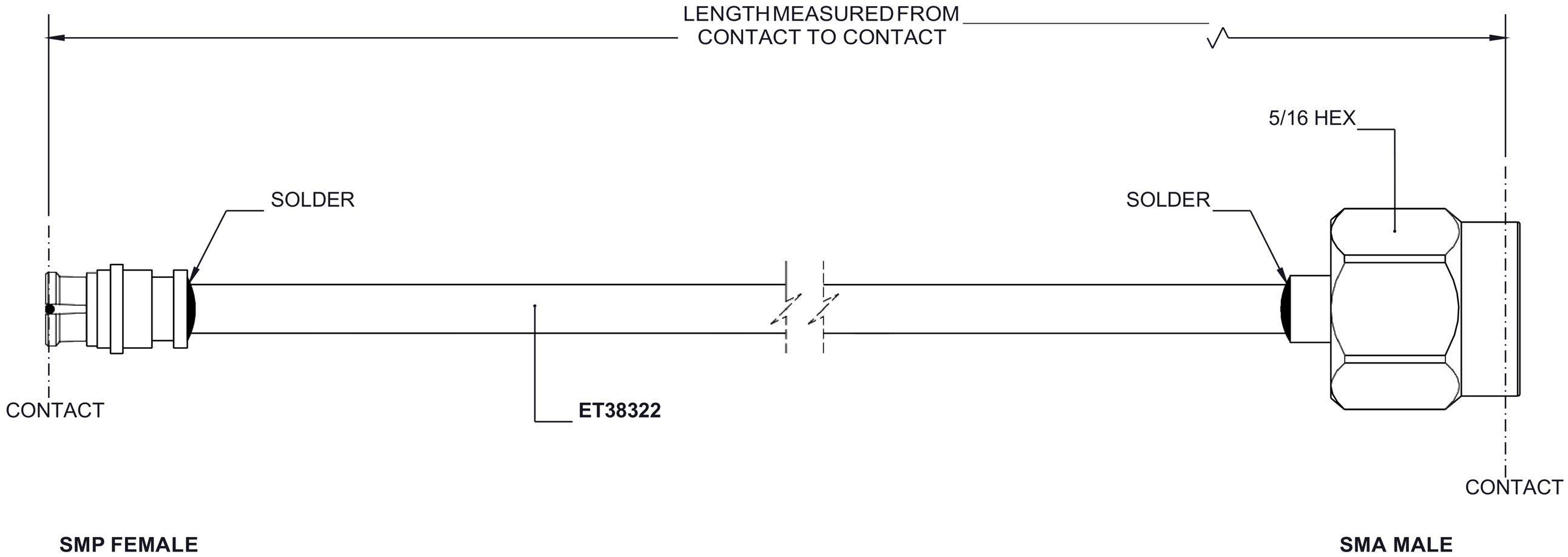

THESE COMMODITIES, TECHNOLOGY OR SOFTWARE WERE EXPORTED FROM THE UNITED STATES IN ACCORDANCE WITH THE EXPORT ADMINISTRATION REGULATIONS. DIVERSION CONTRARY TO U.S. LAW PROHIBITED.

UNLESS OTHERWISE SPECIFIED
LEADING DIMENSIONS ARE INCHES
DIMENSIONS IN [ ] ARE MILLIMETERS

TOLERANCES:

.X=± .2	[5.08]	FRACTIONS
.XX=± .01	[.25]	± 1/32
.XXX=± .005	[.13]	ANGLES ± 1°

ALL DIMENSIONS SHOWN
ARE FOR REFERENCE ONLY.

THIRD-ANGLE PROJECTION

PASTERNACK
an INFINITE brand
8th Floor, Building 1, Yongfu Science and Technology
Center Industrial Park
P.O.Box 16759, Irvine, CA 92623.
Phone: 1.949.261.1920 | 1.866.727.8376
Fax: 1.949.261.7451
| e-mail: sales@Ebeestock.com

THE INFORMATION AND
DESIGN IN THIS DOCUMENT
IS THE PROPERTY OF
Ebeestock CORPORATION. ALL
RIGHTS RESERVED.

SHEET 1 OF 1

SCALE N/A

SIZE	CAGE	DRAWN BY	PART NUMBER	REV
A	53919	K.DANG	ET3W07044	A

T-Rev.B