SMP Female Right Angle to SMP Female Right Angle Cable 50 cm Length Using ET38322J Coax

# RF Cable Assemblies Technical Data Sheet ET32434

## Configuration

- Connector 1: SMP Female Right Angle
- Connector 2: SMP Female Right Angle
- Cable Type: ET38323

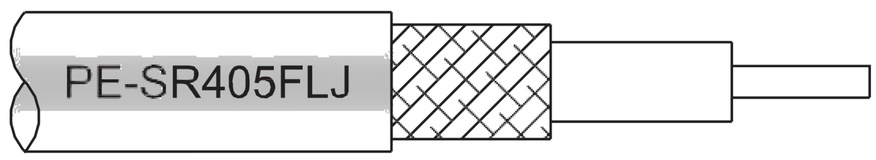


## Features

- Max Frequency 18 GHz
- Shielding Effectivity > 100 dB
- 69.5% Phase Velocity
- FEP Jacket

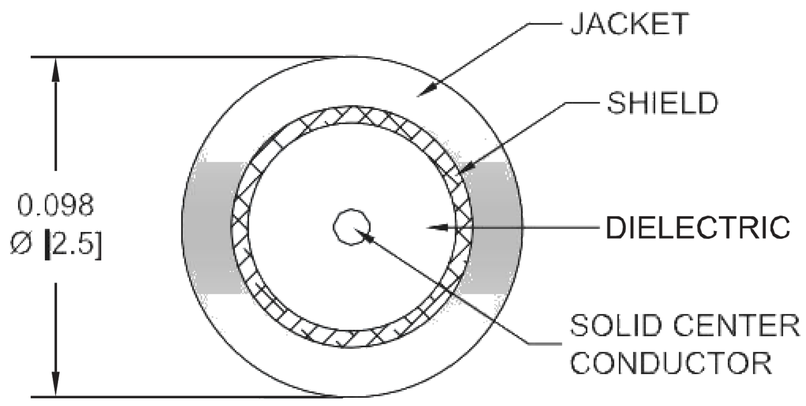


## Applications

- General Purpose
- Laboratory Use

### Description

Ebeestock's ET32434 SMP female right angle to SMP female right angle 50 cm cable using ET38323 coax is part of our full line of RF components available for same-day shipping. Ebeestock's formable RF cable assemblies provide an alternative to costly pre-formed semi-rigid assemblies since they are hand formable. This Ebeestock SMP to SMP cable assembly has a female to female gender configuration with 50 ohm formable ET38323 coax. The ET32434 SMP female to SMP female cable assembly operates to 18 GHz. The right angle SMP interfaces on the ET38323 cable allow for easier connections in tight spaces.

Custom versions of most RF cable assemblies can be built and shipped same day. Custom cable assembly lengths can be obtained by specifying the desired length on the web site at time of order or by contacting a sales representative. Other available RF cable assembly value added services include connector orientation or clocking, heat shrink booting and custom labeling. RF testing can also be performed to document the electrical performance of your cable assembly.

Click the following link (or enter part number in "SEARCH" on website) to obtain additional part information including price, inventory and certifications: SMP Female Right Angle to SMP Female Right Angle Cable 50 cm Length Using ET-SR405FLJ Coax ET32434

8th Floor, Building 1, Yongfu Science and Technology Center Industrial Park,
Nanzha District 5, Humen,523900, Dongguan, Guangdong, China.

Webstie:www.ebeestock.com Email:sales@ebeestock.com

© 2022 Ebeestock Enterprises All Rights Reserved

SMP Female Right Angle to SMP Female Right Angle Cable 50 cm Length Using ET38322J Coax

# RF Cable Assemblies Technical Data Sheet ET32434

## Electrical Specifications

| Description | Minimum | Typical | Maximum | Units |
|---|---|---|---|---|
| Frequency Range | DC | | 18 | GHz |
| VSWR | | | 1.4:1 | |
| Velocity of Propagation | | 69.5 | | % |
| RF Shielding | 100 | | | dB |
| Group Delay | | 1.43 [4.69] | | ns/ft [ns/m] |
| Capacitance | | 29 [95.14] | | pF/ft [pF/m] |
| DC Resistance Inner Conductor | | 65.7 [215.55] | | Ω/1000ft [Ω/Km] |
| DC Resistance Outer Conductor | | 10.2 [33.46] | | Ω/1000ft [Ω/Km] |

## Specifications by Frequency

| Description | F1 | F2 | F3 | F4 | F5 | Units |
|---|---|---|---|---|---|---|
| Frequency | 1 | 2 | 4.5 | 9 | 18 | GHz |
| Insertion Loss (Max.) | 0.78 | 0.86 | 1.07 | 1.45 | 2.2 | dB |

Electrical Specification Notes:
The Insertion Loss data above is based on the performance specifications of the coax used in this assembly. Insertion Loss is estimated as 0.2 dB per connector.

## Mechanical Specifications

### Cable Assembly

| | |
|---|---|
| Length* | 19.68 in [499.87 mm] |
| Diameter | 0.156 in [3.96 mm] |

### Cable

| | |
|---|---|
| Cable Type | ET38323 |
| Impedance | 50 Ohms |
| Inner Conductor Type | Solid |
| Inner Conductor Material and Plating | Copper Clad Steel, Silver |
| Dielectric Type | PTFE |
| Number of Shields | 1 |
| Outer Conductor Material and Plating | Tinned Copper Composite Braid |
| Jacket Material | FEP, Black |
| Jacket Diameter | 0.105 in [2.67 mm] |
| One Time Minimum Bend Radius | 0.5 in [12.7 mm] |
| Repeated Minimum Bend Radius | 0.787 in [19.99 mm] |

Click the following link (or enter part number in “SEARCH” on website) to obtain additional part information including price, inventory and certifications: SMP Female Right Angle to SMP Female Right Angle Cable 50 cm Length Using ET-SR405FLJ Coax ET32434

8th Floor, Building 1, Yongfu Science and Technology Center Industrial Park,
Nanzha District 5, Humen,523900, Dongguan, Guangdong, China.

Webstie:www.ebeestock.com Email:sales@ebeestock.com

© 2022 Ebeestock Enterprises All Rights Reserved

SMP Female Right Angle to SMP Female Right Angle Cable 50 cm Length Using ET38322J Coax

# RF Cable Assemblies Technical Data Sheet ET32434

## Connectors

| Description | Connector 1 | Connector 2 |
|---|---|---|
| Type | SMP Female Right Angle | SMP Female Right Angle |
| Specification | MIL-STD-348 | MIL-STD-348 |
| Impedance | 50 Ohms | 50 Ohms |
| Contact Material and Plating | Beryllium Copper, Gold | Beryllium Copper, Gold |
| Contact Plating Specification | MIL-G-45204 | MIL-G-45204 |
| Dielectric Type | PTFE | PTFE |
| Body Material and Plating | Beryllium Copper, Gold | Beryllium Copper, Gold |
| Body Plating Specification | MIL-G-45204 | MIL-G-45204 |

## Environmental Specifications

### Temperature

Operating Range -55 to +125 deg C

## Compliance Certifications (see product page for current document)

## Plotted and Other Data

Notes:

Click the following link (or enter part number in “SEARCH” on website) to obtain additional part information including price, inventory and certifications: SMP Female Right Angle to SMP Female Right Angle Cable 50 cm Length Using ET-SR405FLJ Coax ET32434

8th Floor, Building 1, Yongfu Science and Technology Center Industrial Park,
Nanzha District 5, Humen,523900, Dongguan, Guangdong, China.

Webstie:www.ebeestock.com Email:sales@ebeestock.com

© 2022 Ebeestock Enterprises All Rights Reserved

SMP Female Right Angle to SMP Female Right Angle Cable 50 cm Length Using ET38322J Coax

# RF Cable Assemblies Technical Data Sheet ET32434

## How to Order

Part Number Configuration: **ET3W08886 - xx uu**

- ET3W08886 — Base Number
- xx — Length
- uu — Unit of Measure:
  - cm = Centimeters
  - <blank> = Inches

Example: ET3W08886-12 = 12 inches long cable
ET3W08886-100cm = 100 cm long cable

SMP Female Right Angle to SMP Female Right Angle Cable 50 cm Length Using ET38323 Coax from Ebeestock Enterprises has same day shipment for domestic and International orders. Our RF, microwave and millimeter wave products maintain a 99.4% availability and are part of the broadest selection in the industry.

Click the following link (or enter part number in “SEARCH” on website) to obtain additional part information including price, inventory and certifications: SMP Female Right Angle to SMP Female Right Angle Cable 50 cm Length Using ET38323 Coax ET32434

**URL:** https://www.ebeestock.com/smp-female-right-angle-to-smp-female-right-angle-cable-12-inch-length-using-pe-sr405flj-coax-0032429

The information contained in this document is accurate to the best of our knowledge and representative of the part described herein. It may be necessary to make modifications to the part and/or the documentation of the part, in order to implement improvements. Ebeestock reserves the right to make such changes as required. Unless otherwise stated, all specifications are nominal. Ebeestock does not make any representation or warranty regarding the suitability of the part described herein for any particular purpose, and Ebeestock does not assume any liability arising out of the use of any part or documentation.

8th Floor, Building 1, Yongfu Science and Technology Center Industrial Park,
Nanzha District 5, Humen,523900, Dongguan, Guangdong, China.

Webstie:www.ebeestock.com Email:sales@ebeestock.com

© 2022 Ebeestock Enterprises All Rights Reserved

© 2022 Ebeestock Enterprises All Rights Reserved

www.ebeestock.com

| REVISIONS | | | |
|---|---|---|---|
| REV. | DESCRIPTION | DATE | APPROVED |
| A | INITIAL RELEASE | 8/24/2020 | S.ELLIS |

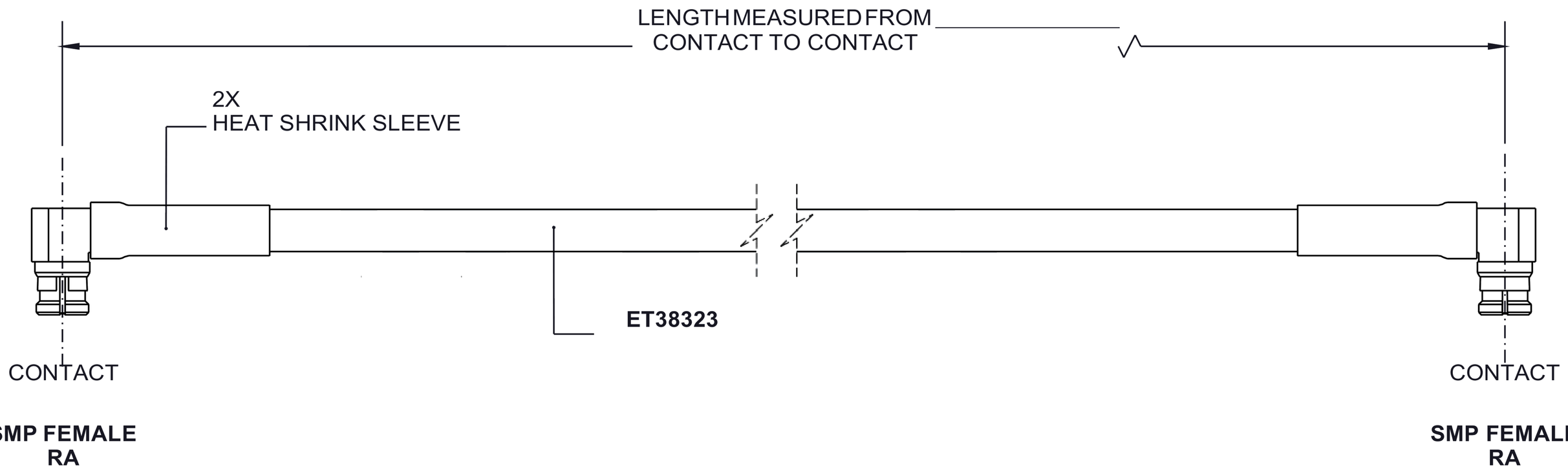


UNLESS OTHERWISE SPECIFIED
LEADING DIMENSIONS ARE INCHES
DIMENSIONS IN [ ] ARE MILLIMETERS

TOLERANCES:

.X = ±.2 [5.08]
.XX = ± .02 [ .51 ]
.XXX = ±.005 [ .13 ]

FRACTIONS
± 1/32
ANGLES ± 1°

CABLE LENGTH (L) TOLERANCES:

L ≤ 12 [305] = +1 [25] / -0
12 [305] < L ≤ 60 [1524] = +2 [51] / -0
60 [1524] < L ≤ 120 [3048] = +4 [102] / -0
120 [3048] < L ≤ 300 [7620] = +6 [152] / -0
300 [7620] < L = +5%L / -0

ALL DIMENSIONS SHOWN
ARE FOR REFERENCE ONLY.

ebeestock
Ebeestock.com
8th Floor, Building 1, Yongfu Science
and Technology Center Industrial Park,
Nanzha District 5, Humen,523900, Dongguan, Guangdong, China.
**Webstie:** www.ebeestock.com **Email:** sales@ebeestock.com

THIRD-ANGLE PROJECTION

THE INFORMATION AND
DESIGN IN THIS DOCUMENT
IS THE PROPERTY OF
Ebeestock CORPORATION ALL
RIGHTS RESERVED.

SHEET 1 OF 1

SCALE N/A

THESE COMMODITIES, TECHNOLOGY OR SOFTWARE WERE EXPORTED FROM THE UNITED STATES IN ACCORDANCE WITH THE EXPORT ADMINISTRATION REGULATIONS. DIVERSION CONTRARY TO U.S. LAW PROHIBITED.

| SIZE | CAGE CODE | DRAWN BY | ITEM NO. | REV |
|---|---|---|---|---|
| A | 53919 | K.DANG | ET3W08886 | A |