SMA Female 2 Hole Flange to SMP Female Right Angle Cable 60 Inch Length Using ET38322J Coax

RF Cable Assemblies Technical Data Sheet ET32496

Configuration

- Connector 1: SMA Female 2 Hole Flange
- Connector 2: SMP Female Right Angle
- Cable Type: ET38323

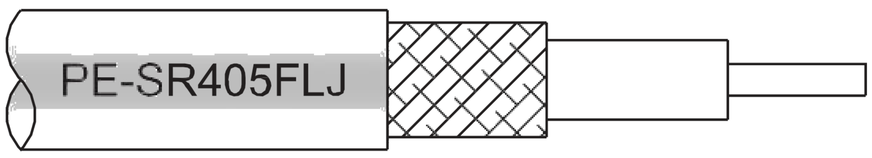

Features

- Max Frequency 10 GHz
- Shielding Effectivity > 100 dB
- 69.5% Phase Velocity
- FEP Jacket

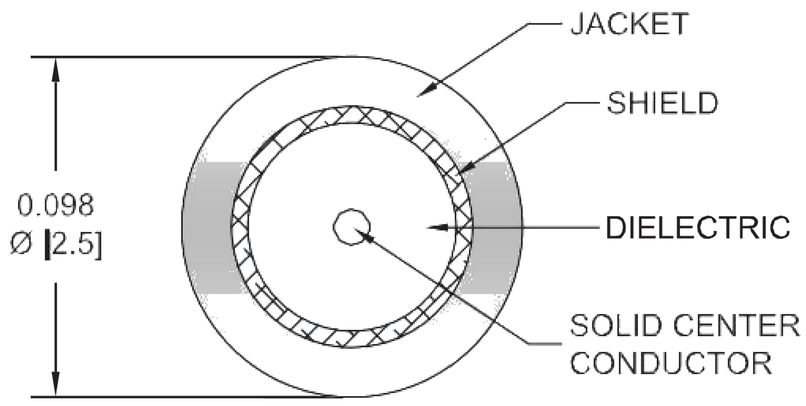

Applications

- General Purpose
- Laboratory Use

Description

Ebeestock's ET32496 SMA female 2 hole flange to SMP female right angle 60 inch cable using ET38323 coax is part of our full line of RF components available for same-day shipping. Ebeestock's formable RF cable assemblies pro- vide an alternative to costly pre-formed semi-rigid assemblies since they are hand formable. This Ebeestock SMA to SMP cable assembly has a female to female gender configuration with 50 ohm formable ET38323 coax. The ET32496 SMA female to SMP female cable assembly operates to 10 GHz. The right angle SMP interface on the ET38323 cable allows for easier connections in tight spaces. Our RF cable assembly with SMA 2 hole flange interface allows designers to create external connections on their product enclosures, and can be used in a variety of other rack mount and panel mount applications.

Custom versions of most RF cable assemblies can be built and shipped same day. Custom cable assembly lengths can be obtained by specifying the desired length on the web site at time of order or by contacting a sales representative. Other avail- able RF cable assembly value added services include connector orientation or clocking, heat shrink booting and custom label- ing. RF testing can also be performed to document the electrical performance of your cable assembly.

Click the following link (or enter part number in "SEARCH" on website) to obtain additional part information including price, inventory and certifications: SMA Female 2 Hole Flange to SMP Female Right Angle Cable 60 Inch Length Using ET-SR405FLJ Coax ET32496

8th Floor, Building 1, Yongfu Science and Technology Center Industrial Park,
Nanzha District 5, Humen,523900, Dongguan, Guangdong, China.

Webstie:www.ebeestock.com Email:sales@ebeestock.com

© 2022 Ebeestock Enterprises All Rights Reserved

SMA Female 2 Hole Flange to SMP Female Right Angle Cable 60 Inch Length Using ET38322J Coax

RF Cable Assemblies Technical Data Sheet ET32496

Electrical Specifications

Description	Minimum	Typical	Maximum	Units
Frequency Range	DC		10	GHz
VSWR			1.5:1	
Velocity of Propagation		69.5		%
RF Shielding	100			dB
Group Delay		1.43 [4.69]		ns/ft [ns/m]
Capacitance		29 [95.14]		pF/ft [pF/m]
DC Resistance Inner Conductor		65.7 [215.55]		Ohms/1000ft [Ohms/
Km]				
DC Resistance Outer Conductor		10.2 [33.46]		Ohms/1000ft [Ohms/
Km]				

Specifications by Frequency

Description	F1	F2	F3	F4	F5	Units
Frequency	0.5	1	2.5	5	10	GHz
Insertion Loss (Max.)	1.05	1.43	2.03	3.05	4.36	dB

Electrical Specification Notes:
The Insertion Loss data above is based on the performance specifications of the coax use in this assembly. The Insertion Loss includes an estimated insertion loss of 0.3dB of connector Loss

Mechanical Specifications

Cable Assembly

Length*	60 in [152.4 cm]
Diameter	0.25 in [6.35 mm]

Cable

Cable Type	ET38323
Impedance	50 Ohms
Inner Conductor Type	Solid
Inner Conductor Material and Plating	Copper Clad Steel, Silver
Dielectric Type	PTFE
Number of Shields	1
Outer Conductor Material and Plating	Tinned Copper Composite Braid
Jacket Material	FEP, Black
Jacket Diameter	0.105 in [2.67 mm]

Click the following link (or enter part number in “SEARCH” on website) to obtain additional part information including price, inventory and certifications: SMA Female 2 Hole Flange to SMP Female Right Angle Cable 60 Inch Length Using ET-SR405FLJ Coax ET32496

8th Floor, Building 1, Yongfu Science and Technology Center Industrial Park,
Nanzha District 5, Humen,523900, Dongguan, Guangdong, China.

Webstie:www.ebeestock.com Email:sales@ebeestock.com

© 2022 Ebeestock Enterprises All Rights Reserved

SMA Female 2 Hole Flange to SMP Female Right Angle Cable 60 Inch Length Using ET38322J Coax

RF Cable Assemblies Technical Data Sheet ET32496

One Time Minimum Bend Radius	0.5 in [12.7 mm]
Repeated Minimum Bend Radius	0.787 in [19.99 mm]

Connectors

Description	Connector 1	Connector 2
Type	SMA Female 2 Hole Flange	SMP Female Right Angle
Specification	MIL-STD-348	DESC 94008
Impedance	50 Ohms	50 Ohms
Contact Material and Plating	Beryllium Copper, Gold	Beryllium Copper, Gold
Contact Plating Specification	MIL-G-45204	MIL-G-45204
Dielectric Type	PTFE	PTFE
Body Material and Plating	Stainless Steel, Gold	Beryllium Copper, Gold
Body Plating Specification	MIL-G-45204	MIL-G-45204

Mechanical Specification Notes:
*All cable assemblies have a length tolerance of 1.5% or ± 3/8”, whichever is greater.

Compliance Certifications (see product page for current document)

Plotted and Other Data

Notes:

Click the following link (or enter part number in “SEARCH” on website) to obtain additional part information including price, inventory and certifications: SMA Female 2 Hole Flange to SMP Female Right Angle Cable 60 Inch Length Using ET-SR405FLJ Coax ET32496

8th Floor, Building 1, Yongfu Science and Technology Center Industrial Park,
Nanzha District 5, Humen,523900, Dongguan, Guangdong, China.

Webstie:www.ebeestock.com Email:sales@ebeestock.com

© 2022 Ebeestock Enterprises All Rights Reserved

SMA Female 2 Hole Flange to SMP Female Right Angle Cable 60 Inch Length Using ET38322J Coax

RF Cable Assemblies Technical Data Sheet ET32496

How to Order

Part Number Configuration: **ET3W05557 - xx uu**

- ET3W05557: Base Number
- xx: Length
- uu: Unit of Measure:
  - cm = Centimeters
  - <blank> = Inches

Example: ET3W05557-12 = 12 inches long cable
ET3W05557-100cm = 100 cm long cable

SMA Female 2 Hole Flange to SMP Female Right Angle Cable 60 Inch Length Using ET38323 Coax from Ebeestock Enterprises has same day shipment for domestic and International orders. Our RF, microwave and millimeter wave products maintain a 99.4% availability and are part of the broadest selection in the industry.

Click the following link (or enter part number in “SEARCH” on website) to obtain additional part information including price, inventory and certifications: SMA Female 2 Hole Flange to SMP Female Right Angle Cable 60 Inch Length Using ET-SR405FLJ Coax ET32496

URL: https://www.ebeestock.com/sma-female-2-hole-flange-to-smp-female-right-angle-cable-12-inch-length-using-pe-sr405flj-coax-0032492

The information contained in this document is accurate to the best of our knowledge and representative of the part described herein. It may be necessary to make modifications to the part and/or the documentation of the part, in order to implement improvements. Ebeestock reserves the right to make such changes as required. Unless otherwise stated, all specifications are nominal. Ebeestock does not make any representation or warranty regarding the suitability of the part described herein for any particular purpose, and Ebeestock does not assume any liability arising out of the use of any part or documentation.

8th Floor, Building 1, Yongfu Science and Technology Center Industrial Park,
Nanzha District 5, Humen,523900, Dongguan, Guangdong, China.

Webstie:www.ebeestock.com Email:sales@ebeestock.com

© 2022 Ebeestock Enterprises All Rights Reserved

© 2022 Ebeestock Enterprises All Rights Reserved

www.ebeestock.com

REVISIONS			
REV.	DESCRIPTION	DATE	APPROVED
A	INITIAL RELEASE	04/23/19	S.ELLIS

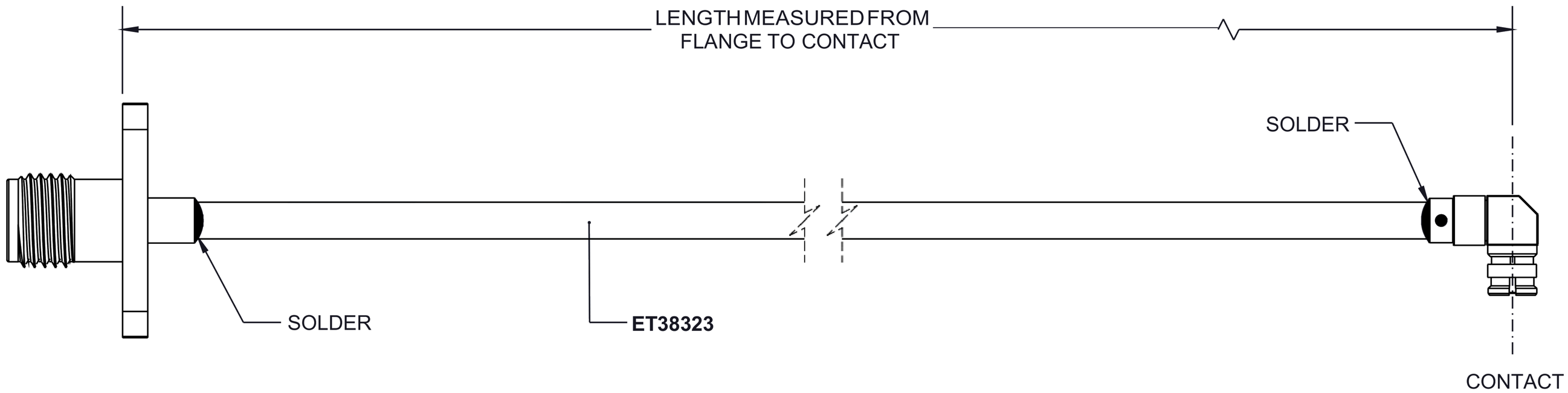

SMA FEMALE
2 HOLE FLANGE

SMP FEMALE
RA

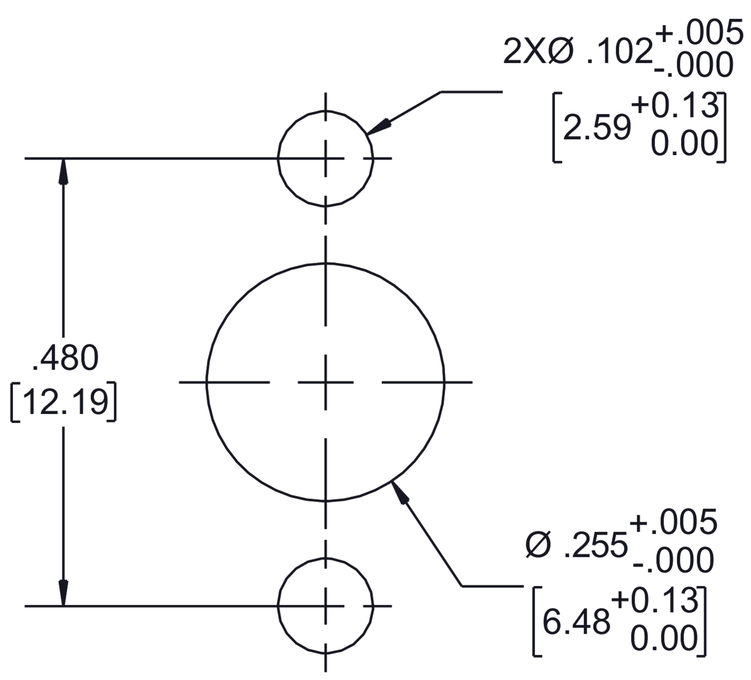

MOUNTING HOLE

UNLESS OTHERWISE SPECIFIED
LEADING DIMENSIONS ARE INCHES
DIMENSIONS IN [ ] ARE MILLIMETERS

TOLERANCES:

.X=± .2	[5.08]	FRACTIONS
.XX=± .01	[.25]	± 1/32
.XXX=± .005	[.13]	ANGLES ± 1°

ALL DIMENSIONS SHOWN
ARE FOR REFERENCE ONLY.

THIRD ANGLE PROJECTION

ebeestock
Ebeestock.com
8th Floor, Building 1, Yongfu Science
and Technology Center Industrial Park,
Nanzha District 5, Humen,523900, Dongguan, Guangdong, China.
Webstie: www.ebeestock.com **Email:** sales@ebeestock.com

THE INFORMATION AND
DESIGN IN THIS DOCUMENT
IS THE PROPERTY OF
Ebeestock CORPORATION. ALL
RIGHTS RESERVED.

SHEET 1 OF 1

SCALE N/A

SIZE	CAGE	DRAWN BY	PART NUMBER	REV
A	53919	K.DANG	ET3W05557	A

THESE COMMODITIES, TECHNOLOGY OR SOFTWARE WERE EXPORTED FROM THE UNITED STATES IN ACCORDANCE WITH THE EXPORT ADMINISTRATION REGULATIONS. DIVERSION CONTRARY TO U.S. LAW PROHIBITED.