SMA Female 2 Hole Flange to SMP Female Right Angle Cable 50 cm Length Using ET38322J Coax

# RF Cable Assemblies Technical Data Sheet ET32497

## Configuration

- Connector 1: SMA Female 2 Hole Flange
- Connector 2: SMP Female Right Angle
- Cable Type: ET38323

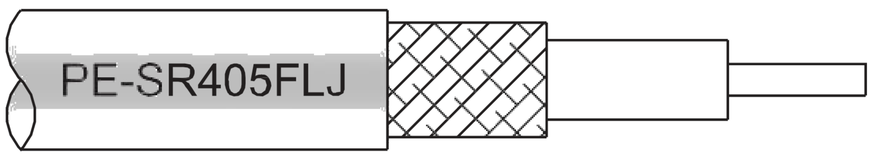


## Features

- Max Frequency 10 GHz
- Shielding Effectivity > 100 dB
- 69.5% Phase Velocity
- FEP Jacket

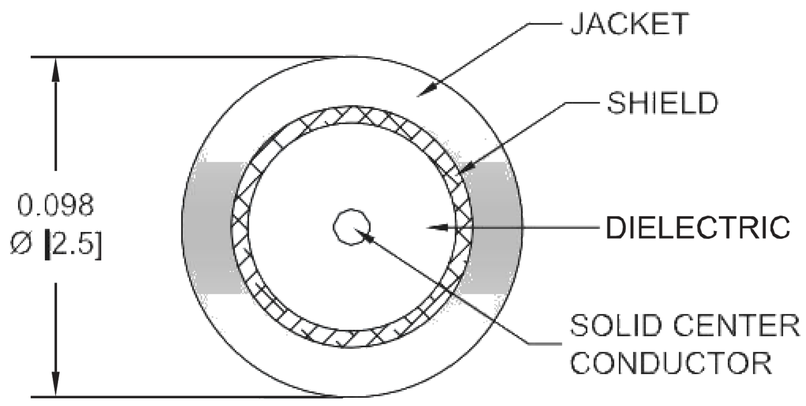


## Applications

- General Purpose
- Laboratory Use

### Description

Ebeestock's ET32497 SMA female 2 hole flange to SMP female right angle 50 cm cable using ET38323 coax is part of our full line of RF components available for same-day shipping. Ebeestock's formable RF cable assemblies provide an alternative to costly pre-formed semi-rigid assemblies since they are hand formable. This Ebeestock SMA to SMP cable assembly has a female to female gender configuration with 50 ohm formable ET38323 coax. The ET32497 SMA female to SMP female cable assembly operates to 10 GHz. The right angle SMP interface on the ET38323 cable allows for easier connections in tight spaces. Our RF cable assembly with SMA 2 hole flange interface allows designers to create external connections on their product enclosures, and can be used in a variety of other rack mount and panel mount applications.

Custom versions of most RF cable assemblies can be built and shipped same day. Custom cable assembly lengths can be obtained by specifying the desired length on the web site at time of order or by contacting a sales representative. Other available RF cable assembly value added services include connector orientation or clocking, heat shrink booting and custom labeling. RF testing can also be performed to document the electrical performance of your cable assembly.

Click the following link (or enter part number in "SEARCH" on website) to obtain additional part information including price, inventory and certifications: SMA Female 2 Hole Flange to SMP Female Right Angle Cable 50 cm Length Using ET-SR-405FLJ Coax ET32497

8th Floor, Building 1, Yongfu Science and Technology Center Industrial Park,
Nanzha District 5, Humen,523900, Dongguan, Guangdong, China.

Webstie:www.ebeestock.com Email:sales@ebeestock.com

© 2022 Ebeestock Enterprises All Rights Reserved

SMA Female 2 Hole Flange to SMP Female Right Angle Cable 50 cm Length Using ET38322J Coax

# RF Cable Assemblies Technical Data Sheet ET32497

## Electrical Specifications

| Description | Minimum | Typical | Maximum | Units |
|---|---|---|---|---|
| Frequency Range | DC | | 10 | GHz |
| VSWR | | | 1.5:1 | |
| Velocity of Propagation | | 69.5 | | % |
| RF Shielding | 100 | | | dB |
| Group Delay | | 1.43 [4.69] | | ns/ft [ns/m] |
| Capacitance | | 29 [95.14] | | pF/ft [pF/m] |
| DC Resistance Inner Conductor | | 65.7 [215.55] | | Ohms/1000ft [Ohms/Km] |
| DC Resistance Outer Conductor | | 10.2 [33.46] | | Ohms/1000ft [Ohms/Km] |

### Specifications by Frequency

| Description | F1 | F2 | F3 | F4 | F5 | Units |
|---|---|---|---|---|---|---|
| Frequency | 0.5 | 1 | 2.5 | 5 | 10 | GHz |
| Insertion Loss (Max.) | 0.55 | 0.67 | 0.87 | 1.2 | 1.64 | dB |

Electrical Specification Notes:
The Insertion Loss data above is based on the performance specifications of the coax use in this assembly. The Insertion Loss includes an estimated insertion loss of 0.3dB of connector Loss

## Mechanical Specifications

### Cable Assembly

| | |
|---|---|
| Length* | 19.68 in [499.87 mm] |
| Diameter | 0.25 in [6.35 mm] |

### Cable

| | |
|---|---|
| Cable Type | ET38323 |
| Impedance | 50 Ohms |
| Inner Conductor Type | Solid |
| Inner Conductor Material and Plating | Copper Clad Steel, Silver |
| Dielectric Type | PTFE |
| Number of Shields | 1 |
| Outer Conductor Material and Plating | Tinned Copper Composite Braid |
| Jacket Material | FEP, Black |
| Jacket Diameter | 0.105 in [2.67 mm] |

Click the following link (or enter part number in “SEARCH” on website) to obtain additional part information including price, inventory and certifications: SMA Female 2 Hole Flange to SMP Female Right Angle Cable 50 cm Length Using ET-SR-405FLJ Coax ET32497

8th Floor, Building 1, Yongfu Science and Technology Center Industrial Park,
Nanzha District 5, Humen,523900, Dongguan, Guangdong, China.

Webstie:www.ebeestock.com Email:sales@ebeestock.com

© 2022 Ebeestock Enterprises All Rights Reserved

SMA Female 2 Hole Flange to SMP Female Right Angle Cable 50 cm Length Using ET38322J Coax

# RF Cable Assemblies Technical Data Sheet ET32497

| | |
|---|---|
| One Time Minimum Bend Radius | 0.5 in [12.7 mm] |
| Repeated Minimum Bend Radius | 0.787 in [19.99 mm] |

**Connectors**

| Description | Connector 1 | Connector 2 |
|---|---|---|
| Type | SMA Female 2 Hole Flange | SMP Female Right Angle |
| Specification | MIL-STD-348 | DESC 94008 |
| Impedance | 50 Ohms | 50 Ohms |
| Contact Material and Plating | Beryllium Copper, Gold | Beryllium Copper, Gold |
| Contact Plating Specification | MIL-G-45204 | MIL-G-45204 |
| Dielectric Type | PTFE | PTFE |
| Body Material and Plating | Stainless Steel, Gold | Beryllium Copper, Gold |
| Body Plating Specification | MIL-G-45204 | MIL-G-45204 |

Mechanical Specification Notes:
*All cable assemblies have a length tolerance of 1.5% or ± 3/8”, whichever is greater.

**Compliance Certifications** (see product page for current document)

**Plotted and Other Data**

Notes:

Click the following link (or enter part number in “SEARCH” on website) to obtain additional part information including price, inventory and certifications: SMA Female 2 Hole Flange to SMP Female Right Angle Cable 50 cm Length Using ET-SR-405FLJ Coax ET32497

8th Floor, Building 1, Yongfu Science and Technology Center Industrial Park,
Nanzha District 5, Humen,523900, Dongguan, Guangdong, China.

Webstie:www.ebeestock.com Email:sales@ebeestock.com

© 2022 Ebeestock Enterprises All Rights Reserved

SMA Female 2 Hole Flange to SMP Female Right Angle Cable 50 cm Length Using ET38322J Coax

## RF Cable Assemblies Technical Data Sheet ET32497

### How to Order

Part Number Configuration: **ET3W05557 - xx uu**

- ET3W05557: Base Number
- xx: Length
- uu: Unit of Measure:
  - cm = Centimeters
  - <blank> = Inches

Example: ET3W05557-12 = 12 inches long cable
ET3W05557-100cm = 100 cm long cable

SMA Female 2 Hole Flange to SMP Female Right Angle Cable 50 cm Length Using ET38323 Coax from Ebeestock Enterprises has same day shipment for domestic and International orders. Our RF, microwave and millimeter wave products maintain a 99.4% availability and are part of the broadest selection in the industry.

Click the following link (or enter part number in “SEARCH” on website) to obtain additional part information including price, inventory and certifications: SMA Female 2 Hole Flange to SMP Female Right Angle Cable 50 cm Length Using ET-SR405FLJ Coax ET32497

**URL:** https://www.ebeestock.com/sma-female-2-hole-flange-to-smp-female-right-angle-cable-12-inch-length-using-pe-sr405flj-coax-0032492

The information contained in this document is accurate to the best of our knowledge and representative of the part described herein. It may be necessary to make modifications to the part and/or the documentation of the part, in order to implement improvements. Ebeestock reserves the right to make such changes as required. Unless otherwise stated, all specifications are nominal. Ebeestock does not make any representation or warranty regarding the suitability of the part described herein for any particular purpose, and Ebeestock does not assume any liability arising out of the use of any part or documentation.

8th Floor, Building 1, Yongfu Science and Technology Center Industrial Park,
Nanzha District 5, Humen,523900, Dongguan, Guangdong, China.

Webstie:www.ebeestock.com Email:sales@ebeestock.com

© 2022 Ebeestock Enterprises All Rights Reserved

© 2022 Ebeestock Enterprises All Rights Reserved

www.ebeestock.com

| REVISIONS | | | |
|---|---|---|---|
| REV. | DESCRIPTION | DATE | APPROVED |
| A | INITIAL RELEASE | 04/23/19 | S.ELLIS |

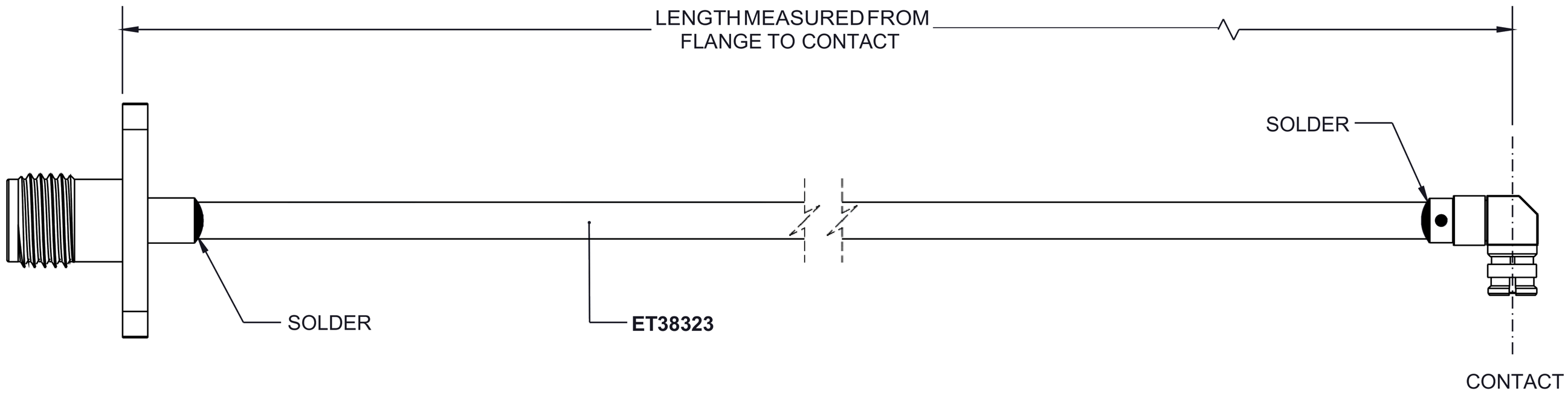


**SMA FEMALE**
**2 HOLE FLANGE**

**SMP FEMALE**
**RA**

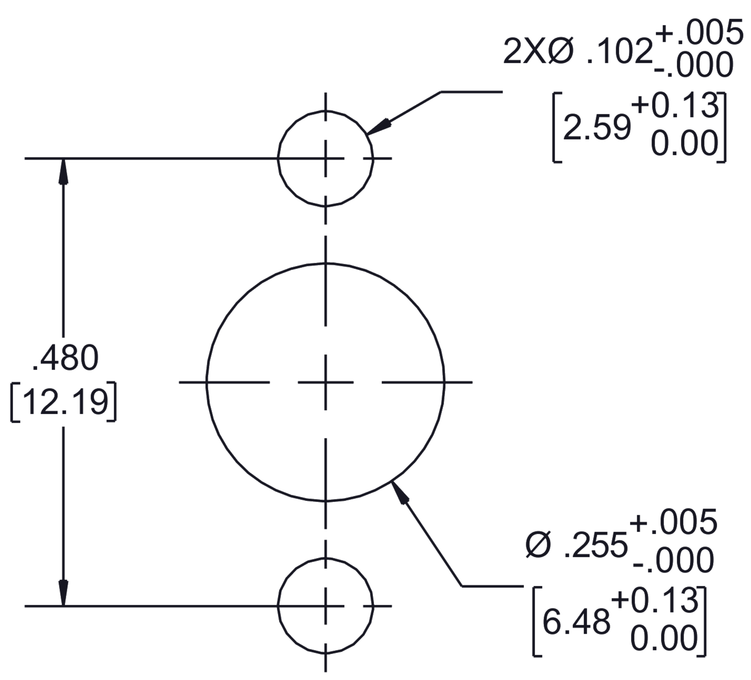


**MOUNTING HOLE**

UNLESS OTHERWISE SPECIFIED
LEADING DIMENSIONS ARE INCHES
DIMENSIONS IN [ ] ARE MILLIMETERS

TOLERANCES:

| | | |
|---|---|---|
| .X=± .2 | [5.08] | FRACTIONS |
| .XX=± .01 | [ .25] | ± 1/32 |
| .XXX=± .005 | [ .13] | ANGLES ± 1° |

ALL DIMENSIONS SHOWN
ARE FOR REFERENCE ONLY.

THIRD ANGLE PROJECTION

ebeestock
Ebeestock.com
8th Floor, Building 1, Yongfu Science
and Technology Center Industrial Park,
Nanzha District 5, Humen,523900, Dongguan, Guangdong, China.
**Webstie:** www.ebeestock.com **Email:** sales@ebeestock.com

THE INFORMATION AND
DESIGN IN THIS DOCUMENT
IS THE PROPERTY OF
Ebeestock CORPORATION. ALL
RIGHTS RESERVED.

SHEET 1 OF 1

SCALE N/A

| SIZE | CAGE | DRAWN BY | PART NUMBER | REV |
|---|---|---|---|---|
| A | 53919 | K.DANG | ET3W05557 | A |

THESE COMMODITIES, TECHNOLOGY OR SOFTWARE WERE EXPORTED FROM THE UNITED STATES IN ACCORDANCE WITH THE EXPORT ADMINISTRATION REGULATIONS. DIVERSION CONTRARY TO U.S. LAW PROHIBITED.