SMA Female Bulkhead to SMP Female Right Angle Cable 100 cm L ength Using ET-ET-RG178 Coax with HeatShrink

RF Cable Assemblies Technical Data Sheet ET32507

Configuration

- Connector 1: SMA Female Bulkhead
- Connector 2: SMP Female Right Angle
- Cable Type: ET-RG178

Features

- Max Frequency 3 GHz
- 70% Phase Velocity
- FEP Jacket

Applications

- General Purpose
- Laboratory Use

Description

Ebeestock's ET32507 SMA female bulkhead to SMP female right angle 100 cm cable using ET-RG178 coax is part of our full line of RF components available for same-day shipping. Ebeestock's flexible RF cable assemblies are ideal for applications where tight bends and flexure are required. This Ebeestock SMA to SMP cable assembly has a female to female gender configuration with 50 ohm flexible ET-RG178 coax. The ET32507 SMA female to SMP female cable assembly operates to 3 GHz. The right angle SMP interface on the ET-RG178 cable allows for easier connections in tight spaces. Our RF cable assembly with SMA bulkhead interface allows designers to create external connections on their product enclosures, and can be used in a variety of other rack mount and panel mount applications.

Custom versions of most RF cable assemblies can be built and shipped same day. Custom cable assembly lengths can be obtained by specifying the desired length on the web site at time of order or by contacting a sales representative. Other available RF cable assembly value added services include connector orientation or clocking, heat shrink booting and custom labeling. RF testing can also be performed to document the electrical performance of your cable assembly.

Electrical Specifications

Description	Minimum	Typical	Maximum	Units
Frequency Range	DC		3	GHz
VSWR			1.4:1	
Velocity of Propagation		70		%
Capacitance		29.4 [96.46]		pF/ft [pF/m]

Click the following link (or enter part number in "SEARCH" on website) to obtain additional part information including price, inventory and certifications: SMA Female Bulkhead to SMP Female Right Angle Cable 100 cm Length Using ET-RG178 Coax with HeatShrink ET32507

8th Floor, Building 1, Yongfu Science and Technology Center Industrial Park,
Nanzha District 5, Humen,523900, Dongguan, Guangdong, China.

Webstie:www.ebeestock.com Email:sales@ebeestock.com

© 2022 Ebeestock Enterprises All Rights Reserved

SMA Female Bulkhead to SMP Female Right Angle Cable 100 cm L ength Using ET-ET-RG178 Coax with HeatShrink

RF Cable Assemblies Technical Data Sheet ET32507

Specifications by Frequency

Description	F1	F2	F3	F4	F5	Units
Frequency	0.25	0.5	1	2.5	3	GHz
Insertion Loss (Max.)	0.99	1.3	1.76	2.6	2.88	dB

Electrical Specification Notes:
The Insertion Loss data above is based on the performance specifications of the coax used in this assembly. The Insertion Loss includes an estimated loss of 0.3dB of connector loss.

Mechanical Specifications

Cable Assembly

Length*	39.37 in [100 cm]
Diameter	0.433 in [11 mm]

Cable

Cable Type	ET-RG178
Impedance	50 Ohms
Inner Conductor Type	Stranded
Inner Conductor Material and Plating	Copper Clad Steel, Silver
Dielectric Type	PTFE
Number of Shields	1
Shield Layer 1	Silver Plated Copper Braid
Jacket Material	FEP, Tan
Jacket Diameter	0.072 in [1.83 mm]
Repeated Minimum Bend Radius	0.4 in [10.16 mm]

Click the following link (or enter part number in “SEARCH” on website) to obtain additional part information including price, inventory and certifications: SMA Female Bulkhead to SMP Female Right Angle Cable 100 cm Length Using ET-RG178 Coax with HeatShrink ET32507

8th Floor, Building 1, Yongfu Science and Technology Center Industrial Park,
Nanzha District 5, Humen,523900, Dongguan, Guangdong, China.

Webstie:www.ebeestock.com Email:sales@ebeestock.com

© 2022 Ebeestock Enterprises All Rights Reserved

SMA Female Bulkhead to SMP Female Right Angle Cable 100 cm L ength Using ET-ET-RG178 Coax with HeatShrink

RF Cable Assemblies Technical Data Sheet ET32507

Connectors

Description	Connector 1	Connector 2
Type	SMA Female Bulkhead	SMP Female Right Angle
Specification		MIL-STD-348A
Impedance	50 Ohms	50 Ohms
Mating Cycles	500	
Contact Material and Plating	Beryllium Copper, Gold	Beryllium Copper, Gold
Contact Plating Specification		MIL-DTL-45204
Dielectric Type	PTFE	PTFE
Outer Conductor Material and Plating	Brass, Gold	Beryllium Copper, Gold
Outer Conductor Plating Specification		MIL-DTL-45204
Body Material and Plating	Brass, Gold	Brass, Gold
Body Plating Specification		MIL-DTL-45204
Coupling Nut Material and Plating	Brass, Gold	

Mechanical Specification Notes:
*All cable assemblies have a length tolerance of 1.5% or ± 3/8”, whichever is greater.

Environmental Specifications

Temperature

Operating Range -55 to +155 deg C

Compliance Certifications (see product page for current document)

Plotted and Other Data

Notes:

Click the following link (or enter part number in “SEARCH” on website) to obtain additional part information including price, inventory and certifications: SMA Female Bulkhead to SMP Female Right Angle Cable 100 cm Length Using ET-RG178 Coax with HeatShrink ET32507

8th Floor, Building 1, Yongfu Science and Technology Center Industrial Park,
Nanzha District 5, Humen,523900, Dongguan, Guangdong, China.

Webstie:www.ebeestock.com Email:sales@ebeestock.com

© 2022 Ebeestock Enterprises All Rights Reserved

SMA Female Bulkhead to SMP Female Right Angle Cable 100 cm L ength Using ET-ET-RG178 Coax with HeatShrink

RF Cable Assemblies Technical Data Sheet ET32507

How to Order

Part Number Configuration: **ET3W05697/HS - xx uu**

- uu — Unit of Measure:
  - cm = Centimeters
  - <blank> = Inches
- xx — Length
- ET3W05697/HS — Base Number

Example: ET3W05697/HS-12 = 12 inches long cable
ET32507 = 100 cm long cable

SMA Female Bulkhead to SMP Female Right Angle Cable 100 cm Length Using ET-RG178 Coax with HeatShrink from Ebeestock Enterprises has same day shipment for domestic and International orders. Our RF, microwave and millimeter wave products maintain a 99.4% availability and are part of the broadest selection in the industry.

Click the following link (or enter part number in “SEARCH” on website) to obtain additional part information including price, inventory and certifications: SMA Female Bulkhead to SMP Female Right Angle Cable 100 cm Length Using ET-RG178 Coax with HeatShrink ET32507

URL: https://www.ebeestock.com/sma-female-bulkhead-to-smp-female-right-angle-cable-12-inch-length-using-rg178-coax-with-heatshrink-0032501

The information contained in this document is accurate to the best of our knowledge and representative of the part described herein. It may be necessary to make modifications to the part and/or the documentation of the part, in order to implement improvements. Ebeestock reserves the right to make such changes as required. Unless otherwise stated, all specifications are nominal. Ebeestock does not make any representation or warranty regarding the suitability of the part described herein for any particular purpose, and Ebeestock does not assume any liability arising out of the use of any part or documentation.

8th Floor, Building 1, Yongfu Science and Technology Center Industrial Park,
Nanzha District 5, Humen,523900, Dongguan, Guangdong, China.

Webstie:www.ebeestock.com Email:sales@ebeestock.com

© 2022 Ebeestock Enterprises All Rights Reserved

© 2022 Ebeestock Enterprises All Rights Reserved

www.ebeestock.com

REVISIONS			
REV.	DESCRIPTION	DATE	APPROVED
A	INITIAL RELEASE	05/02/19	S.ELLIS

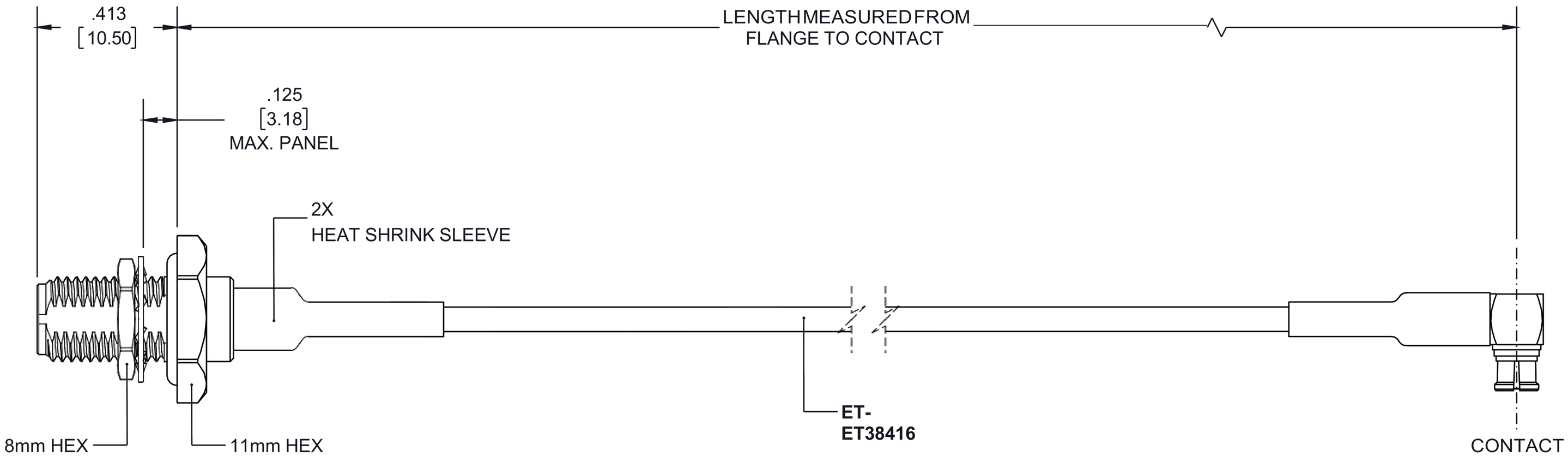

SMA FEMALE
BULKHEAD

SMP FEMALE
RA

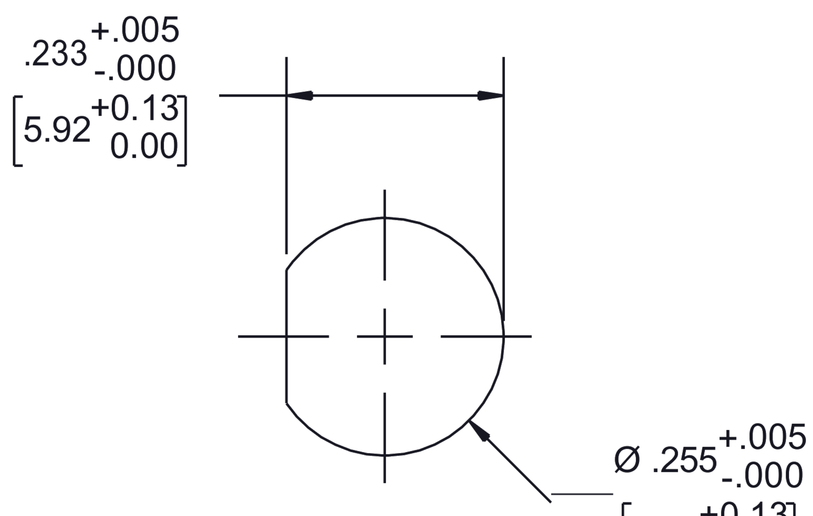

MOUNTING HOLE

UNLESS OTHERWISE SPECIFIED
LEADING DIMENSIONS ARE INCHES
DIMENSIONS IN [ ] ARE MILLIMETERS

TOLERANCES:

.X=± .2 [5.08] | FRACTIONS
.XX=± .01 [.25] | ± 1/32
.XXX=± .005 [.13] | ANGLES ± 1°

ALL DIMENSIONS SHOWN
ARE FOR REFERENCE ONLY.

THIRD ANGLE PROJECTION

ebeestock
Ebeestock.com
8th Floor, Building 1, Yongfu Science
and Technology Center Industrial Park,
Nanzha District 5, Humen,523900, Dongguan, Guangdong, China.
Webstie: www.ebeestock.com **Email:** sales@ebeestock.com

THE INFORMATION AND
DESIGN IN THIS DOCUMENT
IS THE PROPERTY OF
Ebeestock CORPORATION. ALL
RIGHTS RESERVED.

SHEET 1 OF 1

SCALE N/A

SIZE	CAGE	DRAWN BY	PART NUMBER	REV
A	53919	K.DANG	ET3W05697/HS	A

THESE COMMODITIES, TECHNOLOGY OR SOFTWARE WERE EXPORTED FROM THE UNITED STATES IN ACCORDANCE WITH THE EXPORT ADMINISTRATION REGULATIONS. DIVERSION CONTRARY TO U.S. LAW PROHIBITED.