TNC Female Bulkhead to SMP Female Right Angle Cable 50 CM Le ngth Using ET38322 Coax

RF Cable Assemblies Technical Data Sheet ET32533

Configuration

- Connector 1: TNC Female Bulkhead
- Connector 2: SMP Female Right Angle
- Cable Type: ET38322

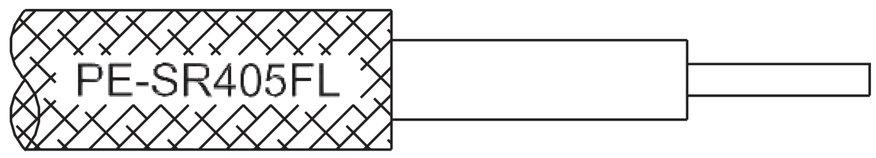

Features

- Max Frequency 6 GHz
- 69.5% Phase Velocity

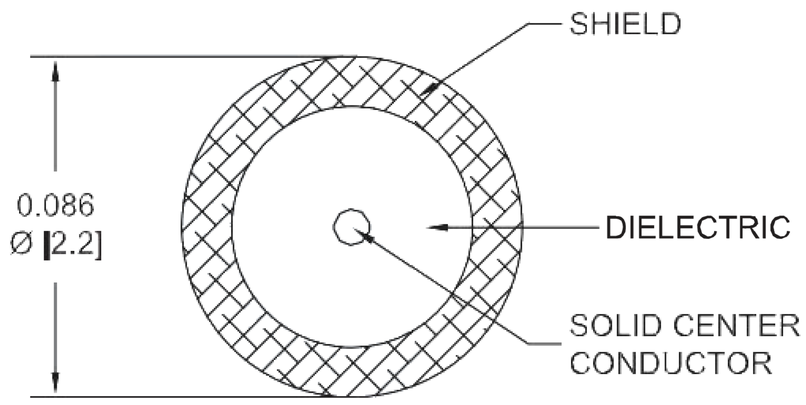

Applications

- General Purpose
- Laboratory Use

Description

Ebeestock's ET32533 TNC female bulkhead to SMP female right angle 50 cm cable using ET38322 coax is part of our full line of RF components available for same-day shipping. Ebeestock's formable RF cable assemblies provide an alternative to costly pre-formed semi-rigid assemblies since they are hand formable. This Ebeestock TNC to SMP cable assembly has a female to female gender configuration with 50 ohm formable ET38322 coax. The ET32533 TNC female to SMP female cable assembly operates to 6 GHz. The right angle SMP interface on the ET38322 cable allows for easier connections in tight spaces. Our RF cable assembly with TNC bulkhead interface allows designers to create external connections on their product enclosures, and can be used in a variety of other rack mount and panel mount applications.

Custom versions of most RF cable assemblies can be built and shipped same day. Custom cable assembly lengths can be obtained by specifying the desired length on the web site at time of order or by contacting a sales representative. Other available RF cable assembly value added services include connector orientation or clocking, heat shrink booting and custom labeling. RF testing can also be performed to document the electrical performance of your cable assembly.

Click the following link (or enter part number in "SEARCH" on website) to obtain additional part information including price, inventory and certifications: TNC Female Bulkhead to SMP Female Right Angle Cable 50 CM Length Using ET38322 Coax ET32533

8th Floor, Building 1, Yongfu Science and Technology Center Industrial Park,
Nanzha District 5, Humen,523900, Dongguan, Guangdong, China.

Webstie:www.ebeestock.com Email:sales@ebeestock.com

© 2022 Ebeestock Enterprises All Rights Reserved

TNC Female Bulkhead to SMP Female Right Angle Cable 50 CM Le
ngth Using ET38322 Coax

RF Cable Assemblies Technical Data Sheet ET32533

Electrical Specifications

Description	Minimum	Typical	Maximum	Units
Frequency Range	DC		6	GHz
VSWR			1.4:1	
Velocity of Propagation		69.5		%
Capacitance		29 [95.14]		pF/ft [pF/m]
DC Resistance Inner Conductor		65.7 [215.55]		Ω/1000ft [Ω/Km]
DC Resistance Outer Conductor		10.2 [33.46]		Ω/1000ft [Ω/Km]

Specifications by Frequency

Description	F1	F2	F3	F4	F5	Units
Frequency	0.25	0.5	1	2.5	6	GHz
Insertion Loss (Typ.)	0.38	0.5	0.62	0.82	1.24	dB

Electrical Specification Notes:
The Insertion Loss data above is based on the performance specifications of the coax and connectors used in this assembly. The Insertion Loss includes an estimated 0.15 dB for the right angle connector and 0.1 dB for the straight connector.

Mechanical Specifications

Cable Assembly

Length*	19.68 in [499.87 mm]
Diameter	0.69 in [17.53 mm]

Cable

Cable Type	ET38322
Impedance	50 Ohms
Inner Conductor Type	Solid
Inner Conductor Material and Plating	Copper Clad Steel, Silver
Dielectric Type	PTFE
Number of Shields	1
Outer Conductor Material and Plating	Copper, Tin
Repeated Minimum Bend Radius	0.78 in [19.81 mm]

Click the following link (or enter part number in “SEARCH” on website) to obtain additional part information including price, inventory and certifications: TNC Female Bulkhead to SMP Female Right Angle Cable 50 CM Length Using ET38322 Coax ET32533

8th Floor, Building 1, Yongfu Science and Technology Center Industrial Park,
Nanzha District 5, Humen,523900, Dongguan, Guangdong, China.

Webstie:www.ebeestock.com Email:sales@ebeestock.com

© 2022 Ebeestock Enterprises All Rights Reserved

TNC Female Bulkhead to SMP Female Right Angle Cable 50 CM Le
ngth Using ET38322 Coax

RF Cable Assemblies Technical Data Sheet ET32533

Connectors

Description	Connector 1	Connector 2
Type	TNC Female Bulkhead	SMP Female Right Angle
Specification		MIL-STD-348A
Impedance	50 Ohms	50 Ohms
Contact Material and Plating	Beryllium Copper, Gold over Nickel	Beryllium Copper, Gold
Contact Plating Specification		MIL-DTL-45204
Dielectric Type	PTFE	PTFE
Outer Conductor Material and Plating		Beryllium Copper, Gold
Outer Conductor Plating Specification		MIL-DTL-45204
Body Material and Plating	Brass, Nickel	Beryllium Copper, Gold
Body Plating Specification		MIL-DTL-45204

Environmental Specifications

Temperature

Operating Range -55 to +165 deg C

Compliance Certifications (see product page for current document)

Plotted and Other Data

Notes:

Click the following link (or enter part number in “SEARCH” on website) to obtain additional part information including price, inventory and certifications: TNC Female Bulkhead to SMP Female Right Angle Cable 50 CM Length Using ET38322 Coax ET32533

8th Floor, Building 1, Yongfu Science and Technology Center Industrial Park,
Nanzha District 5, Humen,523900, Dongguan, Guangdong, China.

Webstie:www.ebeestock.com Email:sales@ebeestock.com

© 2022 Ebeestock Enterprises All Rights Reserved

TNC Female Bulkhead to SMP Female Right Angle Cable 50 CM Le
ngth Using ET38322 Coax

RF Cable Assemblies Technical Data Sheet ET32533

How to Order

Part Number Configuration: **ET3W10030 - xx uu**

- ET3W10030 — Base Number
- xx — Length
- uu — Unit of Measure:
  - cm = Centimeters
  - <blank> = Inches

Example: ET3W10030-12 = 12 inches long cable
ET3W10030-100cm = 100 cm long cable

TNC Female Bulkhead to SMP Female Right Angle Cable 50 CM Length Using ET38322 Coax from Ebeestock Enterprises has same day shipment for domestic and International orders. Our RF, microwave and millimeter wave products maintain a 99.4% availability and are part of the broadest selection in the industry.

Click the following link (or enter part number in “SEARCH” on website) to obtain additional part information including price, inventory and certifications: TNC Female Bulkhead to SMP Female Right Angle Cable 50 CM Length Using ET38322 Coax ET32533

URL: https://www.ebeestock.com/tnc-female-bulkhead-to-smp-female-right-angle-cable-12-inch-length-using-pe-sr405fl-coax-0032528

The information contained in this document is accurate to the best of our knowledge and representative of the part described herein. It may be necessary to make modifications to the part and/or the documentation of the part, in order to implement improvements. Ebeestock reserves the right to make such changes as required. Unless otherwise stated, all specifications are nominal. Ebeestock does not make any representation or warranty regarding the suitability of the part described herein for any particular purpose, and Ebeestock does not assume any liability arising out of the use of any part or documentation.

8th Floor, Building 1, Yongfu Science and Technology Center Industrial Park,
Nanzha District 5, Humen,523900, Dongguan, Guangdong, China.

Webstie:www.ebeestock.com Email:sales@ebeestock.com

© 2022 Ebeestock Enterprises All Rights Reserved

© 2022 Ebeestock Enterprises All Rights Reserved

www.ebeestock.com

REVISIONS			
REV.	DESCRIPTION	DATE	APPROVED
A	INITIAL RELEASE	4/14/2021	S.ELLIS

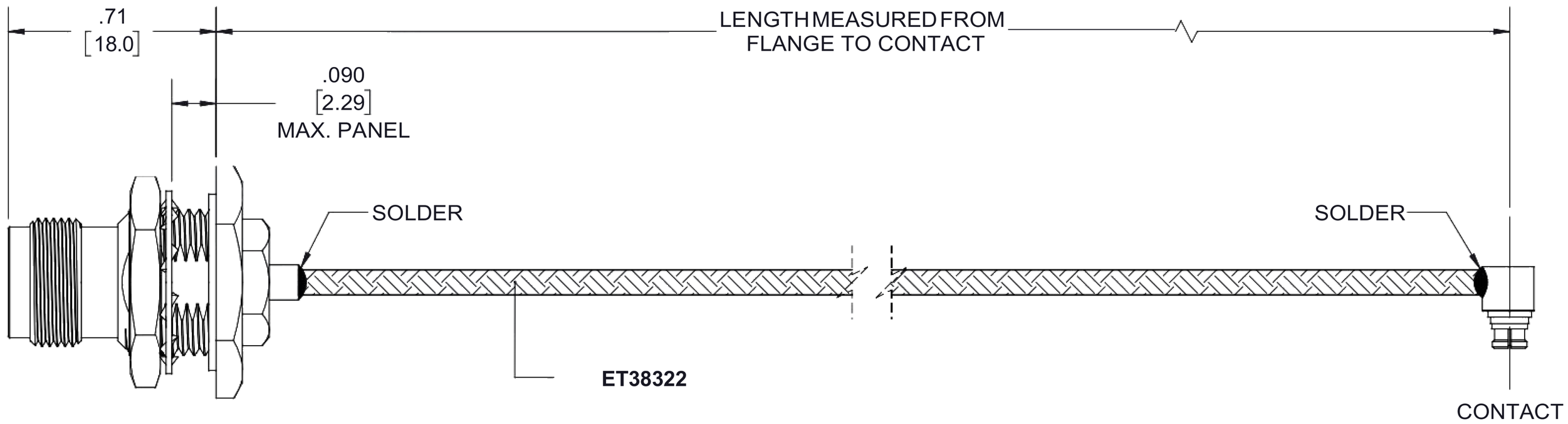

TNC FEMALE
BULKHEAD

SMP FEMALE
RA

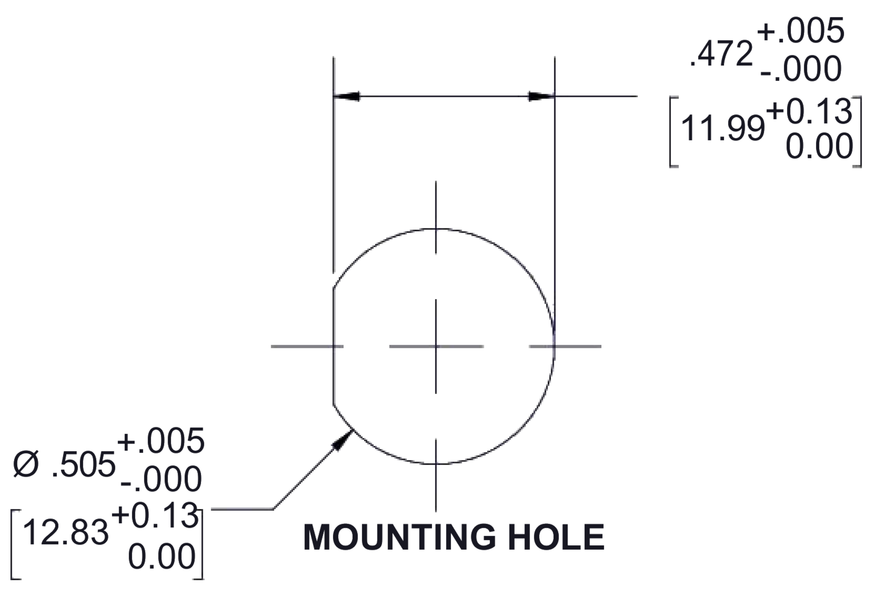

UNLESS OTHERWISE SPECIFIED
LEADING DIMENSIONS ARE INCHES
DIMENSIONS IN [ ] ARE MILLIMETERS

TOLERANCES:

.X = ±.2	[5.08]	FRACTIONS
.XX = ± .02	[.51]	± 1/32
.XXX = ±.005	[.13]	ANGLES ± 1°

CABLE LENGTH (L) TOLERANCES:

L ≤ 12 [305] = +1 [25] / -0
12 [305] < L ≤ 60 [1524] = +2 [51] / -0
60 [1524] < L ≤ 120 [3048] = +4 [102] / -0
120 [3048] < L ≤ 300 [7620] = +6 [152] / -0
300 [7620] < L = +5%L / -0

PASTERNACK®
an INFINITE brand
8th Floor, Building 1, Yongfu
Science and Technology Center
Industrial Park
P.O.Box 16759, Irvine, CA 92623.
Phone: 1.949.261.1920 | 1.866.727.8376
Fax: 1.949.261.7451
Website: E-mail:
sales@Ebeestock.com

THIRD-ANGLE PROJECTION

THE INFORMATION AND DESIGN IN THIS DOCUMENT IS THE PROPERTY OF Ebeestock CORPORATION

ALL RIGHTS RESERVED.

SHEET 1 OF 1

SCALE N/A

SIZE	CAGE CODE	DRAWN BY	ITEM NO.	REV

THESE COMMODITIES, TECHNOLOGY OR SOFTWARE WERE EXPORTED FROM THE UNITED STATES IN ACCORDANCE WITH THE EXPORT ADMINISTRATION REGULATIONS. DIVERSION

T-Rev.D

© 2022 Ebeestock Enterprises All Rights Reserved

CONTRARY TO U.S. LAW PROHIBITED.

ALL DIMENSIONS SHOWN ARE FOR REFERENCE ONLY.

A	53919	K.DANG	ET3W10 030