SMA Female to Push-On SMP Female Right Angle Cable 100 CM Le ngth Using ET-LMR-100 Coax

# RF Cable Assemblies Technical Data Sheet ET32543

## Configuration

- Connector 1: SMA Female
- Connector 2: Push-OnSMP Female Right Angle
- Cable Type: ET-LMR-100A

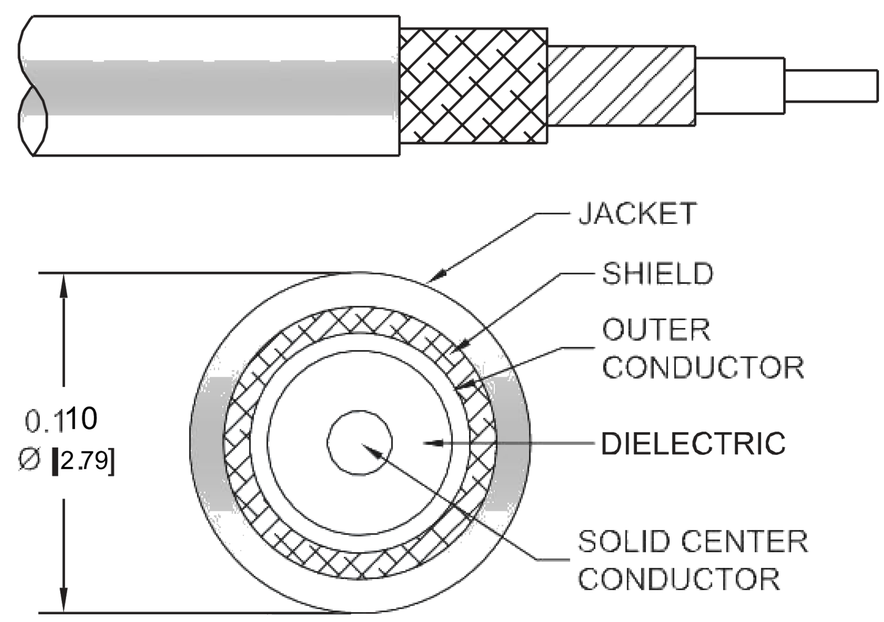


## Features

- Max Frequency 3 GHz
- Shielding Effectivity > 90 dB
- 66% Phase Velocity
- Double Shielded
- PVC Jacket

## Applications

- General Purpose
- Laboratory Use

### Description

Ebeestock's ET32543 SMA female to SMP female push-on right angle 100 cm cable using ET-LMR-100 coax is part of our full line of RF components available for same-day shipping. Ebeestock's flexible RF cable assemblies are ideal for applications where tight bends and flexure are required. This Ebeestock SMA to SMP cable assembly has a female to female gender configuration with 50 ohm flexible ET-LMR-100A coax. The ET32543 SMA female to SMP female cable assembly operates to 3 GHz. The right angle SMP interface on the ET-LMR-100A cable allows for easier connections in tight spaces. The double shielding of this Ebeestock cable assembly provides excellent shielding effectiveness of better than 90 dB.

Custom versions of most RF cable assemblies can be built and shipped same day. Custom cable assembly lengths can be obtained by specifying the desired length on the web site at time of order or by contacting a sales representative. Other available RF cable assembly value added services include connector orientation or clocking, heat shrink booting and custom labeling. RF testing can also be performed to document the electrical performance of your cable assembly.

Click the following link (or enter part number in "SEARCH" on website) to obtain additional part information including price, inventory and certifications: SMA Female to Push-On SMP Female Right Angle Cable 100 CM Length Using ET-LMR-100 Coax ET32543

8th Floor, Building 1, Yongfu Science and Technology Center Industrial Park,
Nanzha District 5, Humen,523900, Dongguan, Guangdong, China.

Webstie:www.ebeestock.com Email:sales@ebeestock.com

© 2022 Ebeestock Enterprises All Rights Reserved

SMA Female to Push-On SMP Female Right Angle Cable 100 CM Le
ngth Using ET-LMR-100 Coax

# RF Cable Assemblies Technical Data Sheet ET32543

## Electrical Specifications

| Description | Minimum | Typical | Maximum | Units |
|---|---|---|---|---|
| Frequency Range | DC | | 3 | GHz |
| VSWR | | | 1.4:1 | |
| Velocity of Propagation | | 66 | | % |
| RF Shielding | 90 | | | dB |
| Group Delay | | 1.54 [5.05] | | ns/ft [ns/m] |
| Capacitance | | 30.8 [101.05] | | pF/ft [pF/m] |
| Inductance | | 0.077 [0.25] | | uH/ft [uH/m] |
| DC Resistance Inner Conductor | | 81 [265.75] | | Ω/1000ft [Ω/Km] |
| DC Resistance Outer Conductor | | 9.5 [31.17] | | Ω/1000ft [Ω/Km] |
| Operating Voltage (AC) | | | 335 | Vrms |
| Dielectric Withstanding Voltage (DC) | | | 500 | Vdc |
| Jacket Spark | | | 2,000 | Vrms |
| Input Power (Peak) | | | 600 | Watts |

## Specifications by Frequency

| Description | F1 | F2 | F3 | F4 | F5 | Units |
|---|---|---|---|---|---|---|
| Frequency | 0.1 | 0.25 | 0.5 | 1 | 3 | GHz |
| Insertion Loss (Typ.) | 0.46 | 0.63 | 0.8 | 1.04 | 1.68 | dB |

Electrical Specification Notes:
The Insertion Loss data above is based on the performance specifications of the coax and connectors used in this assembly. The Insertion Loss includes an estimated 0.15 dB for the right angle connector and 0.1 dB for the straight connector.

## Mechanical Specifications

### Cable Assembly

| | |
|---|---|
| Length* | 39.37 in [100 cm] |
| Diameter | 0.25 in [6.35 mm] |

### Cable

| | |
|---|---|
| Cable Type | ET-LMR-100A |
| Impedance | 50 Ohms |
| Inner Conductor Type | Solid |
| Inner Conductor Material and Plating | Copper Clad Steel |
| Dielectric Type | PE |
| Number of Shields | 2 |

Click the following link (or enter part number in “SEARCH” on website) to obtain additional part information including price, inventory and certifications: SMA Female to Push-On SMP Female Right Angle Cable 100 CM Length Using ET-LMR-100 Coax ET32543

8th Floor, Building 1, Yongfu Science and Technology Center Industrial Park,
Nanzha District 5, Humen,523900, Dongguan, Guangdong, China.

Webstie:www.ebeestock.com Email:sales@ebeestock.com

© 2022 Ebeestock Enterprises All Rights Reserved

SMA Female to Push-On SMP Female Right Angle Cable 100 CM Le ngth Using ET-LMR-100 Coax

# RF Cable Assemblies Technical Data Sheet ET32543

| | |
|---|---|
| Shield Layer 1 | Aluminum Tape |
| Shield Layer 2 | Tinned Copper Braid |
| Jacket Material | PVC, Black |
| Jacket Diameter | 0.11 in [2.79 mm] |
| One Time Minimum Bend Radius | 0.25 in [6.35 mm] |
| Repeated Minimum Bend Radius | 1 in [25.4 mm] |
| Bending Moment | 0.1 lbs-ft [0.14 N-m] |
| Flat Plate Crush | 10 lbs/in [0.18 Kg/mm] |
| Tensile Strength | 15 lbs [6.8 Kg] |

**Connectors**

| Description | Connector 1 | Connector 2 |
|---|---|---|
| Type | SMA Female | SMP Female Right Angle |
| Specification | MIL-STD-348A | MIL-STD-348A |
| Impedance | 50 Ohms | 50 Ohms |
| Connection Method | | Push-On |
| Contact Material and Plating | Beryllium Copper, Gold | Beryllium Copper, Gold |
| Contact Plating Specification | 50µ in. minimum | 30µ in. minimum |
| Dielectric Type | Teflon | Teflon |
| Outer Conductor Material and Plating | Brass, Gold | Beryllium Copper, Gold |
| Outer Conductor Plating Specification | 3µ in. minimum | 3µ in. minimum |
| Body Material and Plating | Brass, Gold | Brass, Gold |
| Body Plating Specification | 3µ in. minimum | 3µ in. minimum |

## Environmental Specifications

**Temperature**

| | |
|---|---|
| Operating Range | -40 to +85 deg C |
| Storage Range | -70 to +85 deg C |

**Compliance Certifications** (see product page for current document)

**Plotted and Other Data**

Notes:

Click the following link (or enter part number in “SEARCH” on website) to obtain additional part information including price, inventory and certifications: SMA Female to Push-On SMP Female Right Angle Cable 100 CM Length Using ET-LMR-100 Coax ET32543

8th Floor, Building 1, Yongfu Science and Technology Center Industrial Park,
Nanzha District 5, Humen,523900, Dongguan, Guangdong, China.

Webstie:www.ebeestock.com Email:sales@ebeestock.com

© 2022 Ebeestock Enterprises All Rights Reserved

SMA Female to Push-On SMP Female Right Angle Cable 100 CM Le
ngth Using ET-LMR-100 Coax

# RF Cable Assemblies Technical Data Sheet ET32543

## How to Order

Part Number Configuration: **ET3W10074 - xx uu**

- ET3W10074 — Length Base Number
- xx — Length
- uu — Unit of Measure:
  - cm = Centimeters
  - <blank> = Inches

Example: ET3W10074-12 = 12 inches long cable
ET32543 = 100 cm long cable

SMA Female to Push-On SMP Female Right Angle Cable 100 CM Length Using ET-LMR-100 Coax from Ebeestock Enterprises has same day shipment for domestic and International orders. Our RF, microwave and millimeter wave products maintain a 99.4% availability and are part of the broadest selection in the industry.

Click the following link (or enter part number in “SEARCH” on website) to obtain additional part information including price, inventory and certifications: SMA Female to Push-On SMP Female Right Angle Cable 100 CM Length Using ET-LMR-100 Coax ET32543

**URL:** https://www.ebeestock.com/sma-female-to-push-on-smp-female-right-angle-cable-12-inch-lengt
h-using-lmr-100-coax-0032537

The information contained in this document is accurate to the best of our knowledge and representative of the part described herein. It may be necessary to make modifications to the part and/or the documentation of the part, in order to implement improvements. Ebeestock reserves the right to make such changes as required. Unless otherwise stated, all specifications are nominal. Ebeestock does not make any representation or warranty regarding the suitability of the part described herein for any particular purpose, and Ebeestock does not assume any liability arising out of the use of any part or documentation.

8th Floor, Building 1, Yongfu Science and Technology Center Industrial Park,
Nanzha District 5, Humen,523900, Dongguan, Guangdong, China.

Webstie:www.ebeestock.com Email:sales@ebeestock.com

© 2022 Ebeestock Enterprises All Rights Reserved

© 2022 Ebeestock Enterprises All Rights Reserved

www.ebeestock.com

| REVISIONS | | | |
|---|---|---|---|
| REV. | DESCRIPTION | DATE | APPROVED |
| A | INITIAL RELEASE | 4/13/2021 | S.ELLIS |

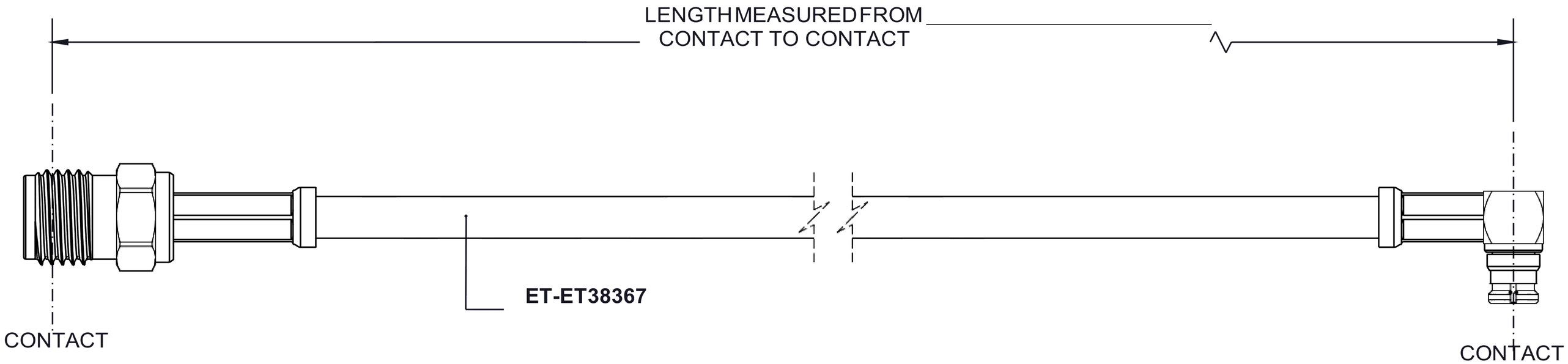


**SMA FEMALE**

**PUSH-ON**
**SMP FEMALE**
**RA**

UNLESS OTHERWISE SPECIFIED
LEADING DIMENSIONS ARE INCHES
DIMENSIONS IN [ ] ARE MILLIMETERS

TOLERANCES:

.X = ±.2 [5.08]
.XX = ± .02 [ .51 ]
.XXX = ±.005 [ .13 ]

FRACTIONS
± 1/32
ANGLES ± 1°

CABLE LENGTH (L) TOLERANCES:

L ≤ 12 [305] = +1 [25] / -0
12 [305] < L ≤ 60 [1524] = +2 [51] / -0
60 [1524] < L ≤ 120 [3048] = +4 [102] / -0
120 [3048] < L ≤ 300 [7620] = +6 [152] / -0
300 [7620] < L = +5%L / -0

ALL DIMENSIONS SHOWN
ARE FOR REFERENCE ONLY.

ebeestock
Ebeestock.com
8th Floor, Building 1, Yongfu Science
and Technology Center Industrial Park,
Nanzha District 5, Humen,523900, Dongguan, Guangdong, China.
**Webstie:** www.ebeestock.com **Email:** sales@ebeestock.com

THIRD-ANGLE PROJECTION

THE INFORMATION AND
DESIGN IN THIS DOCUMENT
IS THE PROPERTY OF
Ebeestock CORPORATION ALL
RIGHTS RESERVED.

SHEET 1 OF 1

SCALE N/A

| SIZE | CAGE CODE | DRAWN BY | ITEM NO. | REV |
|---|---|---|---|---|
| A | 53919 | K.DANG | ET3W10074 | A |

THESE COMMODITIES, TECHNOLOGY OR SOFTWARE WERE EXPORTED FROM THE UNITED STATES IN ACCORDANCE
WITH THE EXPORT ADMINISTRATION REGULATIONS. DIVERSION CONTRARY TO U.S. LAW PROHIBITED.