COMPONENTS	IMPEDANCE
SMA MALE RIGHT ANGLE	50 OHM
SMA FEMALE BULKHEAD	50 OHM

Standard Lengths	
-12	12"
-24	24"
-36	36"
-48	48"
-60	60"
-XXX	Custom Length in inches

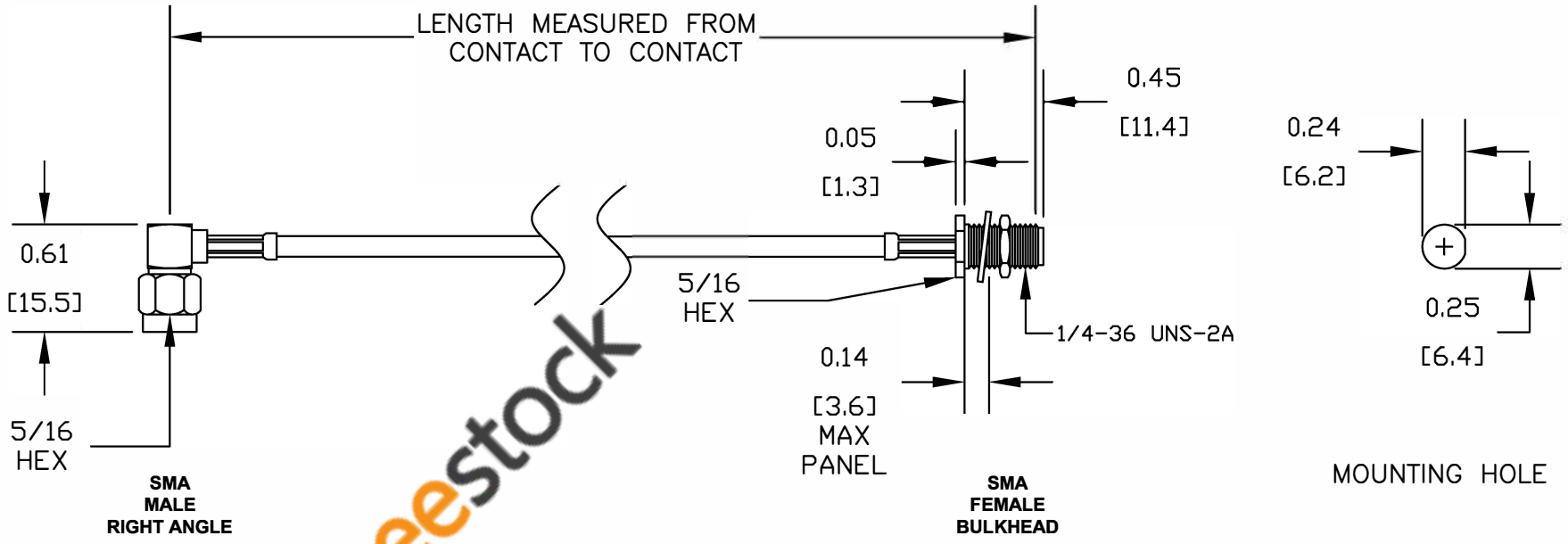

ebeestock

8TH FLOOR, BUILDING 1, YONGFU SCIENCE AND TECHNOLOGY
CENTER INDUSTRIAL PARK, NANZHA DISTRICT 5,
HUMEN,523900,DONGGUAN, GUANGDONG, CHINA
WEBSITE: www.ebeestock.com
EMAIL: sales@ebeestock.com

ebeestock

ET36740	DES. CABLE ASSEMBLY, PE-C100, SMA MALE RIGHT ANGLE TO SMA FEMALE BULKHEAD				
REV. -	FSCM NO. 53919	CAD FILE 082411	SCALE N/A	SIZE A	2231

NOTES:
1. UNLESS OTHERWISE SPECIFIED ALL DIMENSIONS ARE NOMINAL.
2. ALL SPECIFICATIONS ARE SUBJECT TO CHANGE WITHOUT NOTICE AT ANY TIME.
3. DIMENSIONS ARE IN INCHES [mm].
4. LENGTH TOLERANCE IS ± 1.5% OR 3/8", WHICHEVER IS GREATER.